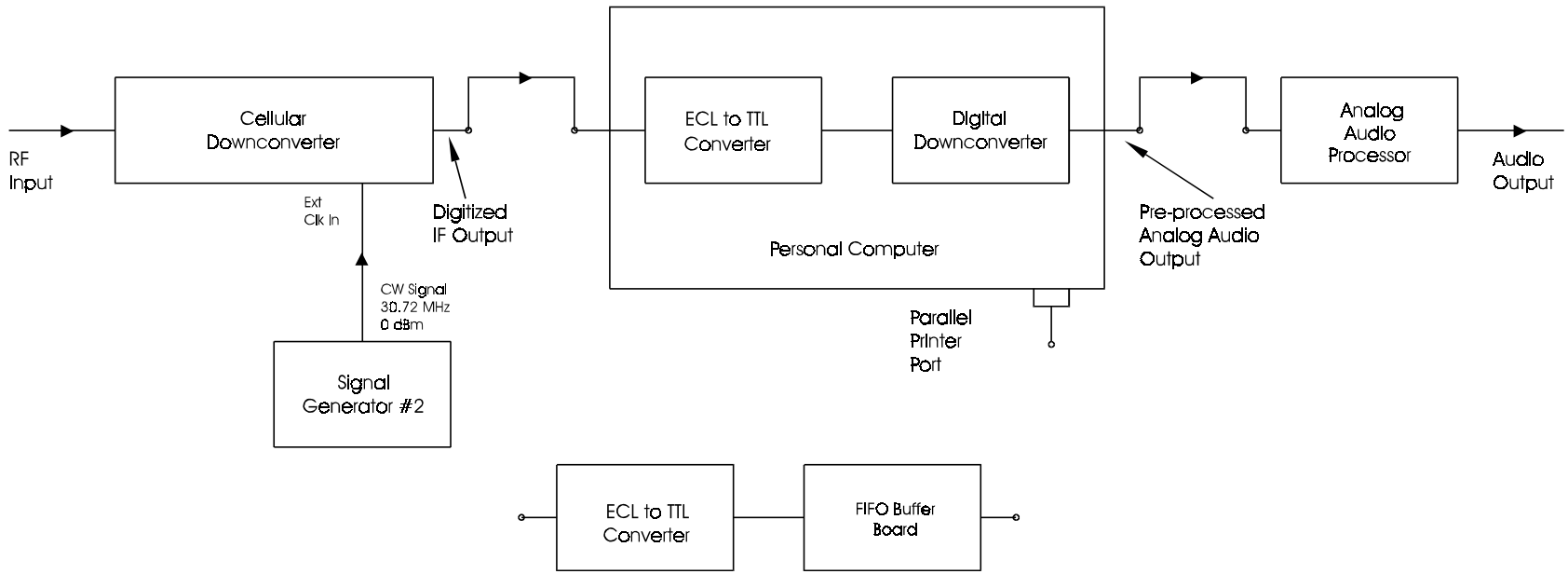


Figure 1. Architecture of the entire configuration of the cellular B-band receiver.

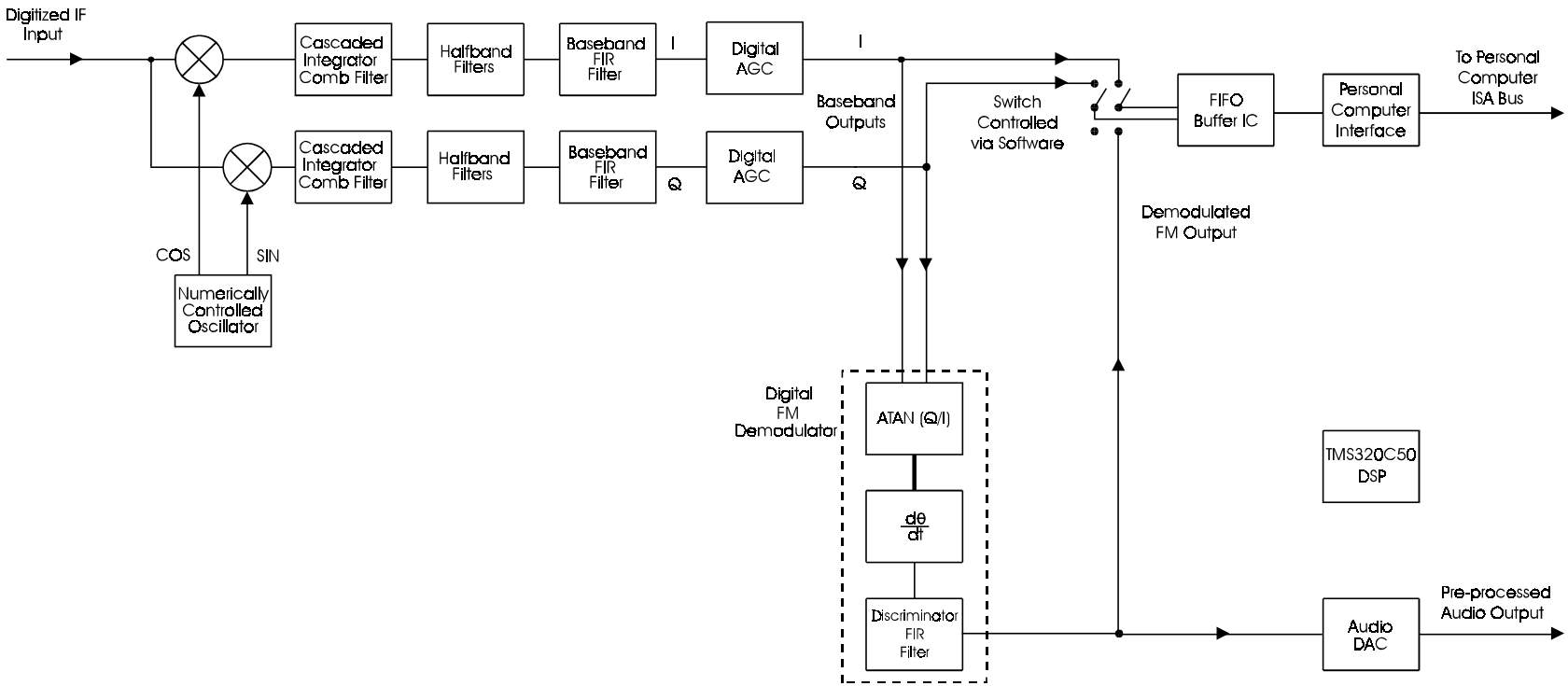


Figure 2. Processing performed by the digital downconverter.

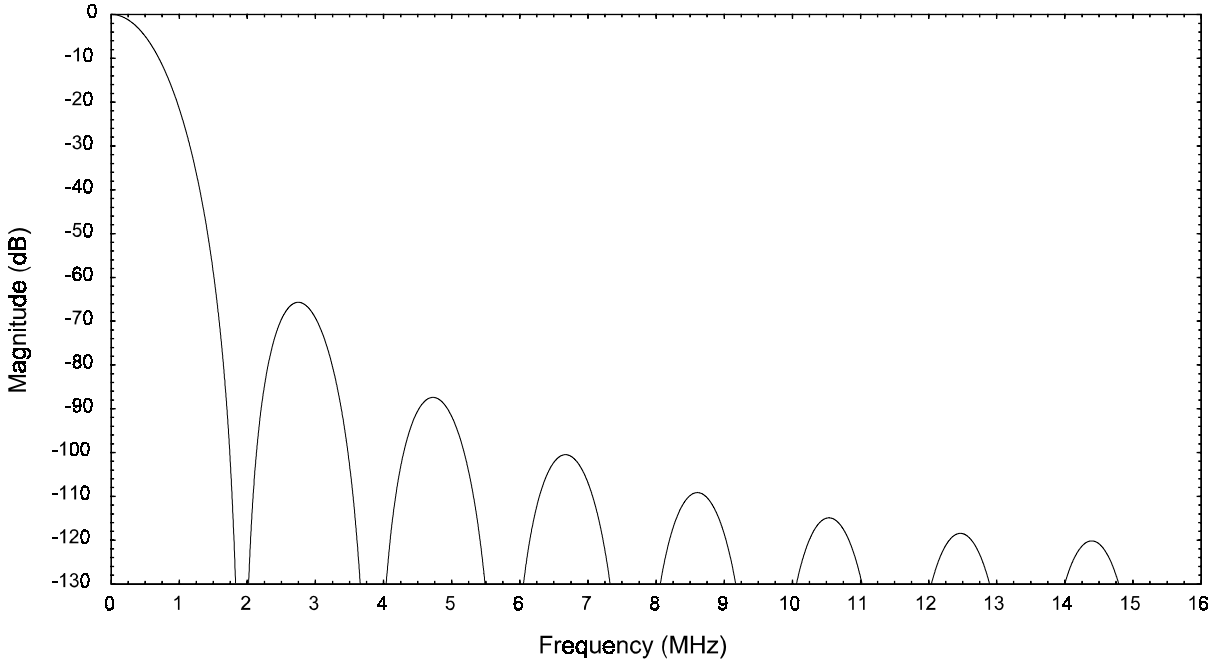


Figure 3. Magnitude response of the CIC filter.

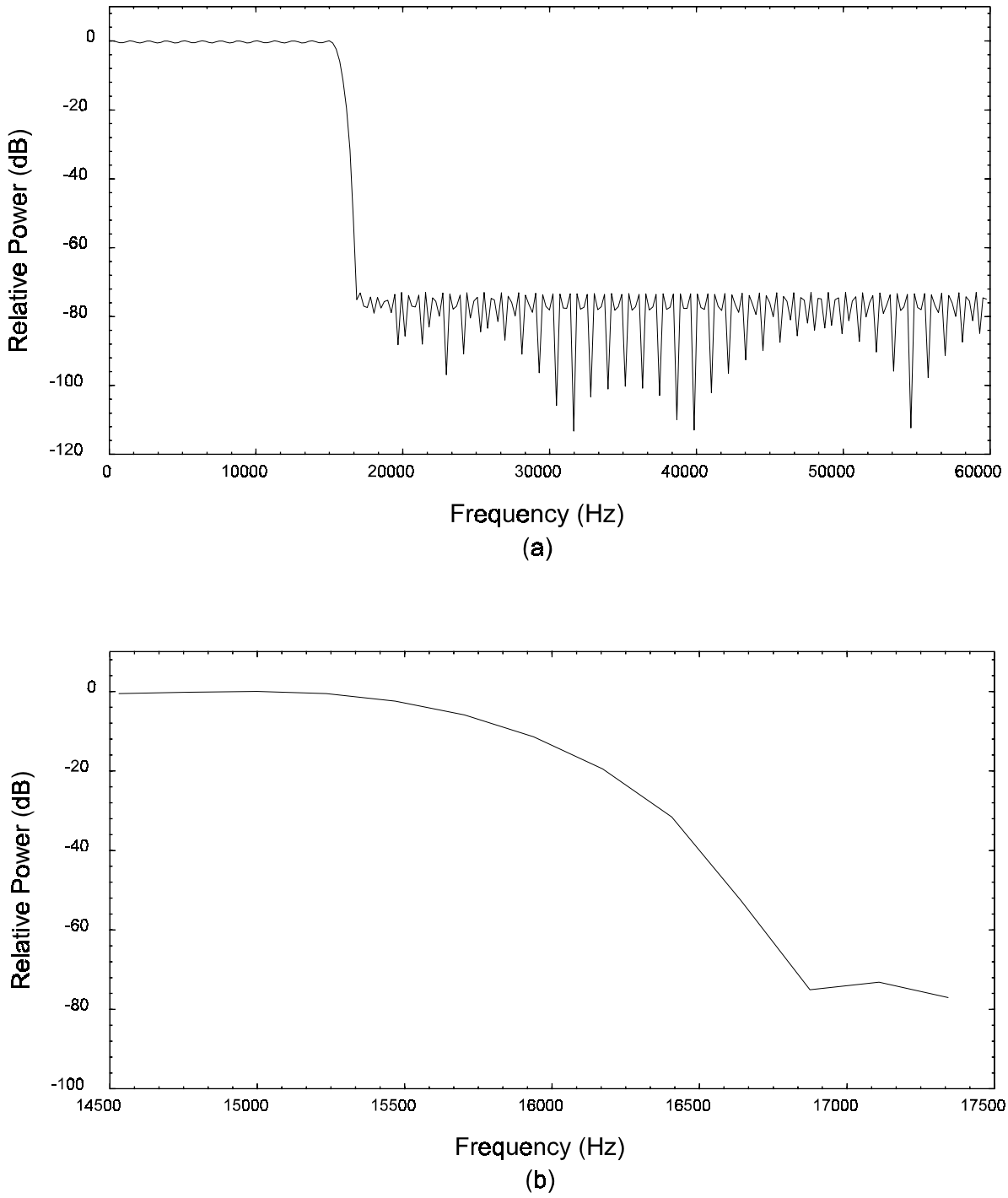


Figure 4. Magnitude response of the baseband FIR filter showing the (a) passband and stopband and (b) transition band.

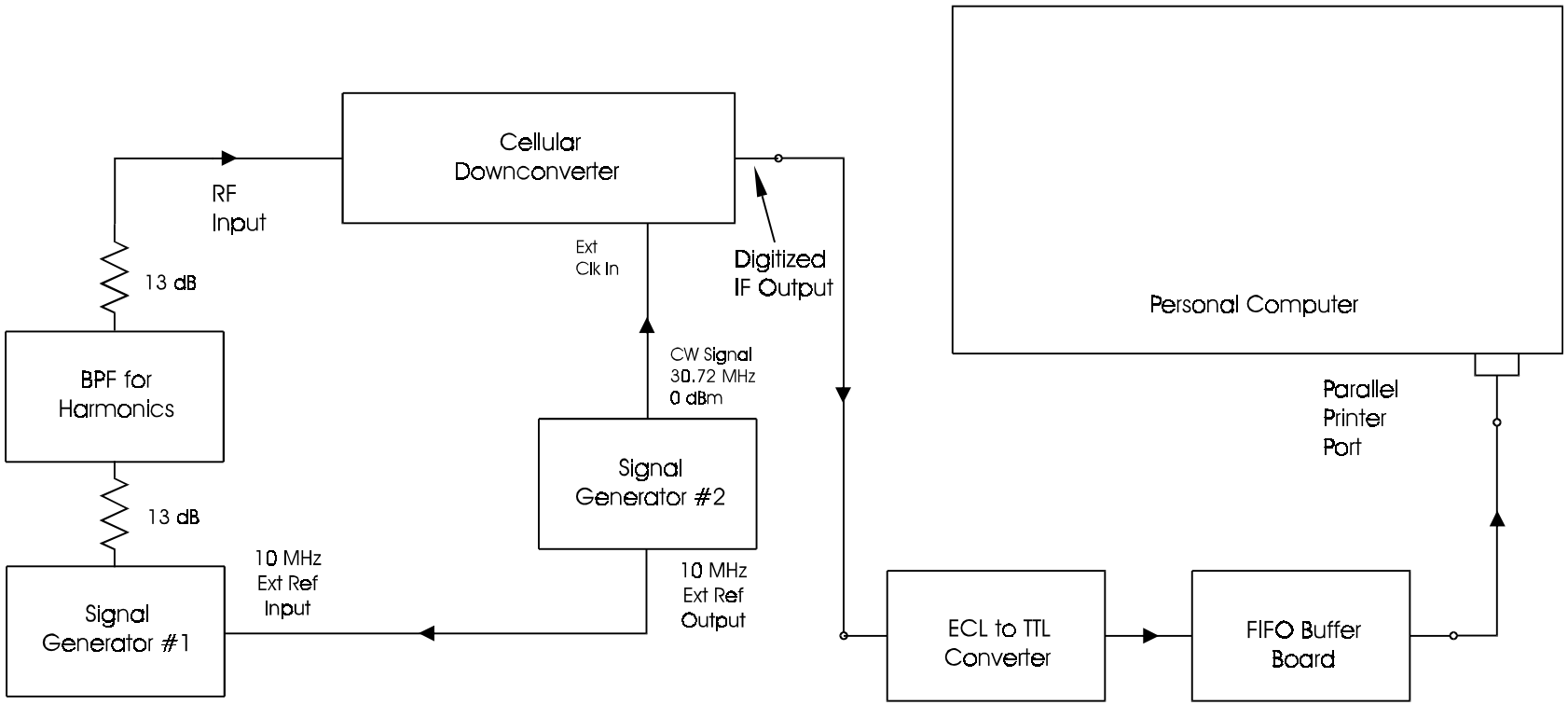


Figure 5. Test setup and receiver configuration to observe the digitized IF output.