DIGITAL TELEVISION (DTV) FIELD STRENGTH AND VIDEO QUALITY STUDY

J. Wayde Allen and Ted Mullen *

A particular concern about digital television (DTV) broadcasts is whether such broadcasts have sufficient power to be received using inexpensive indoor antennas located inside a typical home. To test this, the Institute for Telecommunication Sciences (ITS) constructed a "simulated home" mounted on a flatbed trailer. This allowed ITS to move the test home to a number of locations in the vicinity of an operating commercial DTV transmitter. By equipping this test home with commercially available DTV receivers and an indoor antenna located at the center of the home, ITS could then observe and record the DTV reception at a number of test locations. This information was further correlated with the incident field strengths by measuring the signal power outside the structure at a height of 10 meters above ground and at a location inside the structure at a height of roughly 1.5 meters above ground. This report summarizes the results of this study.

Key words: digital; field strength; power; quality; reception; television; TV

1 INTRODUCTION

As the deployment of digital television (DTV) moves forward, a number of concerns have been raised regarding the power limits placed on the technology. Of particular concern is whether reception of DTV is possible using commercially available DTV receivers and inexpensive set top or "rabbit-ears" antennas positioned at arbitrary locations in a home. Since over-the-air DTV broadcasts are currently available in a number of metropolitan areas, one can test DTV reception in a number of home sites. However, since houses located in different areas are constructed using a variety of materials and are not all furnished the same way, analysis of such data is difficult. There are simply too many variables. If no picture is obtained at one location, how can one determine if the lack of reception is caused by too little power, multi-path interference caused by reflections of the DTV signal off of nearby objects, obstruction of the signal by intervening structures, interference of the signal by some local noise source, or differences in the construction of the two buildings?

There are several ways that one can deal with this problem. One approach is to account for as many variables as possible. Another is to try and control the number of experimental variables in order to make the problem more tractable. For this test, ITS chose to limit the number of variables by constructing a simulated home that could be moved to a number of test locations. This eliminated the problem of trying to compare data taken in different structures and allowed ITS to look specifically at how location and power affected the reception of DTV signals inside a structure.

*The authors are with the Institute for Telecommunication Sciences, National Telecommunications and Information Administration, U.S. Department of Commerce, Boulder, CO 80305.

2 THE TEST

2.1 Hardware Requirements

The major elements of the test setup include:

- Simulated Home Enclosure
- VHF/UHF Indoor TV Antenna
- Two Commercial DTV Receivers (different brands and chip sets)
- Digital Camcorder
- TV Monitor
- GPS Receiver
- Calibrated Dipole Antenna
- Spectrum Analyzer

To improve the approximation of the enclosure to a typical house, the structure included a window in the broad wall, was insulated with fiberglass, and was paneled with 1/4 inch plywood. All of the equipment was assembled as diagrammed in Figure 1.

Both the indoor TV antenna and the calibrated dipole antenna could be mounted inside the test enclosure at the same location. This allowed ITS to position the indoor TV antenna for recording the DTV receiver's video signal, or to measure the field strength at this location using the calibrated dipole and spectrum analyzer. Additionally, mounting the same dipole antenna on a 10-meter mast allowed ITS to position it outside the enclosure at a height of 10 meters above ground for an external field strength measurement. This height approximates the location of an external antenna located on a representative home.

2.2 Test Procedure

The following test procedure was followed at each of the locations where observations were made.

1. Park the test structure at a test location. The orientation of the structure was random to the extent that the vehicle could legally and safely be parked at the chosen location.
2. Connect the indoor TV antenna to the first DTV receiver.
3. Tune the DTV receiver to an available DTV broadcast. In this case, the station was KDVR-Denver, located on channel 32 with a center frequency of 581 MHz, and authorized to broadcast from Lookout Mountain in Golden, Colorado, with an effective radiated power of 233 kW.
4. Choose the field strength indicator display from the menu on the DTV receiver and adjust the antenna to obtain the best signal as reported by the DTV receiver display. The antenna adjustments were only those built into the antenna, namely rotation and tilt of the loop element. In all cases the antenna location remains constant at the center of the test enclosure.
5. Record the video output from the first DTV receiver.

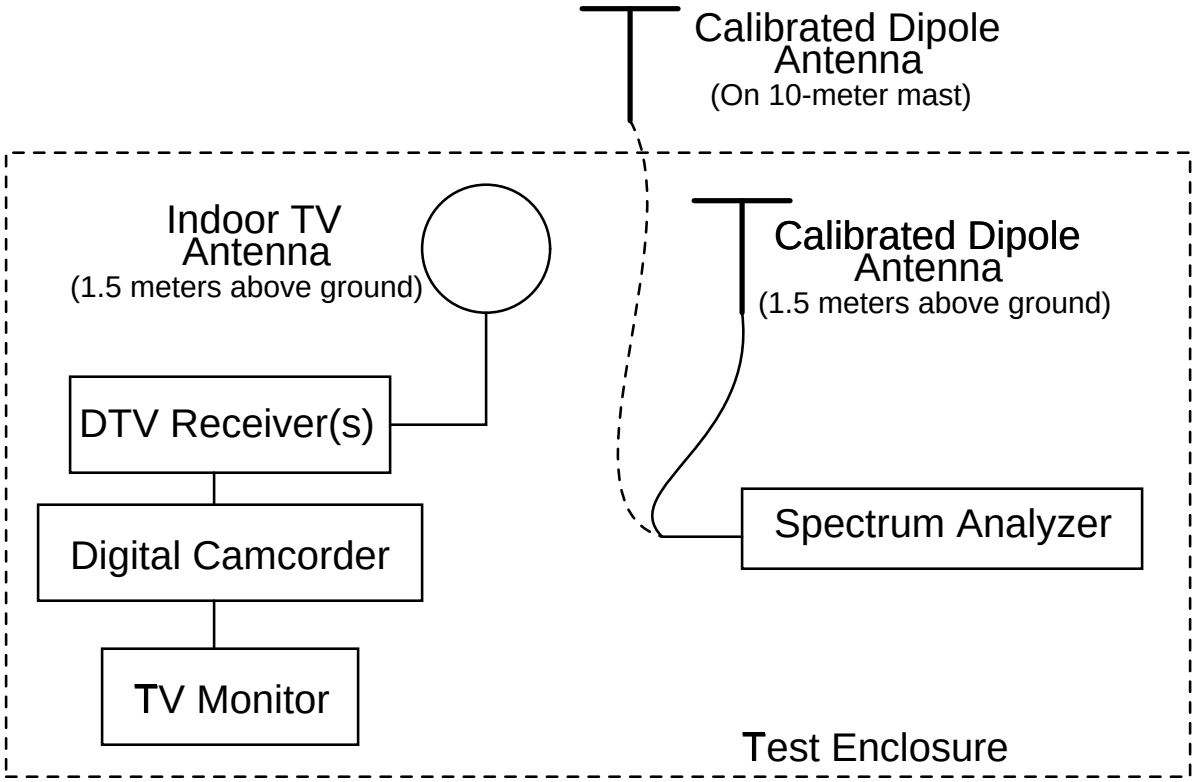

Figure 1: Measurement system configuration.

6. Connect the indoor TV antenna to the second receiver, adjust, and record the video as was done for the first receiver.

7. Replace the indoor TV antenna on the mounting post in the center of the test structure with the calibrated dipole antenna connected to the spectrum analyzer. Position the dipole elements in the same plane as the indoor TV antenna element.

8. ITS was interested in measuring the upper limit of the power since this indicates the most power one is likely to see at the test location. Since the KDVR signal has a center frequency of 581 MHz and a nominal bandwidth of 6 MHz, configuring the spectrum analyzer with the following settings takes 601 peak power samples with a 6-MHz bandwidth centered at 581 MHz:

   - Center Frequency: 581 MHz
   - Span: 0 Hz
   - Sweep Time: 100 ms
   - Resolution Bandwidth: 6 MHz
   - Video Bandwidth: 6 MHz
   - Peak Detector

9. Record the field strength trace data from the spectrum analyzer.

10. ITS was also interested in recording the shape of the DTV signal envelope. This was accomplished by reconfiguring the spectrum analyzer to provide a narrow band (100 kHz) power sweep across a frequency range larger

than the DTV signal bandwidth. This was done by reconfiguring the spectrum analyzer with the following settings:

- Center Frequency: 581 MHz
- Span: 10 MHz
- Sweep Time: 100 ms
- Resolution Bandwidth: 100 kHz
- Video Bandwidth: 100 kHz
- Peak Detector

11. Record the trace data from the spectrum analyzer as configured in 10.
12. Mount the dipole antenna on the 10-meter mast and raise the mast into position.
13. Repeat the same set of spectrum analyzer measurements at the 10-meter height with the spectrum analyzer reset for the field strength measurements as in step 8. The one difference is that the analyzer's detector is set to "peak hold" so that the analyzer indicates the maximum signal when the antenna is rotated about its axis. This eliminates the need to find the antenna polarization giving the maximum signal before taking a reading.
14. Rotate the dipole mast around its axis 360 degrees and record the resulting field strength trace.
15. Configure the spectrum analyzer to record the shape of the DTV signal envelope as was done in step 10.
16. Record the trace data showing the DTV signal envelope as seen at 10 meters.
17. Record a description of the test location and the GPS coordinates.

2.3 Uncertainties

Since this report is anecdotal in nature, a high degree of measurement accuracy was not expected. Nevertheless, the following should give the reader a reasonable estimate of the experiment uncertainty.

For our field strength measurement we measured the power of the DTV signal in a 6-MHz bandwidth and computed the field strength using the expression [1, pg. 9]:

$$F_s = (P_{median} + G_{cable}) + 77.2 + 20log(f) - G_{antenna} \tag{1}$$

where:

F_s is the field strength $(dB\mu V/m)$,

P_{median} is the median power computed from the spectrum analyzer trace (dBm),

f is the center frequency in MHz (in this case $f = 581$),

G_{cable} is the loss of the cable connecting the antenna to the spectrum analyzer (in dB), and

$G_{antenna}$ is the gain of the antenna (in dBi).

For our particular equipment our uncertainties are estimated to be:

$$\Delta P_{median} = \pm 1\ dB (\approx 26\%) \tag{2}$$

$$\Delta G_{antenna} = \pm 2\ dB (\approx 58\%) \tag{3}$$

$$\Delta G_{cable} = \pm 2\ dB (\approx 58\%) \tag{4}$$

The frequency accuracy given in the spectrum analyzer documentation is $\pm 0.2\%$ of the span or ± 1.2 MHz so the frequency term can vary from $20log(579.8) = 55.27$ to $20log(582.2) = 55.30$ giving an estimate of $\Delta 20log(f) = \pm 0.02$. This certainly contributes very little to the overall uncertainty and for this estimation will be ignored.

Combining the fractional uncertainties of the ΔP_{median}, ΔG_{cable}, and $\Delta G_{antenna}$ terms in an RSS summation gives the following estimation for the Type-B measurement uncertainty [2]:

$$u_b = \sqrt{\Delta P_{median}^2 + \Delta G_{cable}^2 + \Delta G_{antenna}^2} = \sqrt{0.26^2 + 0.58^2 + 0.58^2} = 0.86\ (\approx \pm 2.7\ dB) \tag{5}$$

Since there are no repeat data at any given point with which to estimate Type-A uncertainties [2], this information must be estimated from past experience. Similar testing done using the Radio Spectrum Measurement System (RSMS) has shown spectrum analyzer measurements with repeatability on the order of ± 0.5 dB or approximately $\pm 12\%$. This is a reasonable estimate, and results in the following estimate of combined uncertainty

$$u_{Fs} = \sqrt{u_a^2 + u_b^2} = \sqrt{0.12^2 + 0.86^2} = 0.87\ (\approx \pm 2.7\ dB). \tag{6}$$

This gives an expanded uncertainty with a 95% confidence limit $(k = 2)$ of

$$U_{Fs} = 2u_{Fs} = 1.74\ (\approx \pm 4.4\ dB) \tag{7}$$

which describes the "best" measurement accuracy obtainable with this test setup.

3 RESULTS

After collecting data at each of the locations, the median peak power was computed from the 1.5-meter and 10-meter field strength traces (581-MHz center frequency, 0 span, 6-MHz resolution bandwidth). However, since this test was performed as quickly as possible, there were a few instances where our spectrum analyzer trace data did not get saved to disk. This occurred at locations 4, 24, 25, 26, 27, 28, 29, and 30. At these locations it was not possible to compute a median and we were forced to use the operator's hand written record of powers read directly from the spectrum analyzer screen. Field strengths were computed using equation 1, and the resulting field strengths from both sets of data are tabulated along with location and whether a television picture was received on receiver 1 (Rcr 1) or receiver 2 (Rcr 2) in Table 1. All available trace data has been included at the end of this document in Appendix A. A second set of data taken a few weeks later is included in Appendix B. This second data set includes measurements of the root mean square (rms) levels in addition to the peak values.

A formal quality assessment of the received picture was beyond the scope of this experiment. The determination of whether a "picture was received" or not was based on the following decision criteria: If a receiver was able to display a picture for some portion of the observation time, then the reception was deemed successful and a "Y" was entered in

the data table. If no picture was seen at all during the observation time, then the reception was deemed unsuccessful and an “N” was recorded. You may also note a few cases indicating that data was not available (NA) for receiver 1. This condition occurred early in the test before it was discovered that the receiver was not properly tuned to the test signal. Consequently, there are no data in these locations to indicate whether this receiver would have picked up the DTV transmission or not.

The test locations have also been overlayed on top of a field strength prediction map in Figure 2. Here it is important to note that peak field strengths were measured in order to understand the upper bound on the received signal. In contrast, the computer models compute average field strengths, and will indicate a lower predicted field strength. One should also recognize that the computer models assume that the station’s transmit power and antenna pattern exactly match what is on record. Confirmation of this would require testing at the transmitter, which for this study was not possible.

Finally, the video clips recorded from the test receivers were also edited to create a DVD recording. This shows the recorded video from each receiver overlaid with the location and field strength data as tabulated in Table 1.

Table 1: Field Strength Data

Point	Location	Picture		GPS Coordinates	Field Strength $(dB\mu V/m)$	
		Rcr 1	Rcr 2		1.5 m	10 m
1	Table Mountain Ref. pt.	Y	Y	$N40°07.8402'$ $W105°14.6958'$	86	101
2	Gunbarrel, King Soopers	Y	Y	$N40°04.3222'$ $W105°12.1003'$	93	101
3	Doral, Island Green Dr.	Y	Y	$N40°04.2713'$ $W105°11.0340'$	93	102
4	Strawberry Ln., Somerset	Y	Y	$N40°05.5572'$ $W105°09.1382'$	83	103
5	Cottonwood Square	Y	N	$N40°06.0516'$ $W105°10.1134'$	77	90
6	7056 Redwing	Y	Y	$N40°06.1719'$ $W105°12.2390'$	92	104
7	Goat Farm, Niwot Rd.	Y	Y	$N40°06.1118'$ $W105°14.2639'$	98	101
8	7151 Fairways	Y	Y	$N40°06.2669'$ $W105°15.5877'$	96	102
9	Foothills Business Park	N	N	$N40°05.9479'$ $W105°17.0364'$	81	100
10	Bustop Parking Lot	Y	Y	$N40°03.7998'$ $W105°16.9621'$	92	99
11	1501 Quincy	Y	N	$N40°02.8992'$ $W105°16.7355'$	79	91
12	1080 Juniper St.	N	N	$N40°02.8921'$ $W105°16.7239'$	75	81
13	9th and Dellwood	Y	N	$N40°01.7173'$ $W105°17.1381'$	76	77
14	DOC Labs Wing 4	N	N	$N39°59.6490'$ $W105°15.6798'$	63	76
15	NCAR S. Parking Lot	Y	Y	$N39°58.7781'$ $W105°16,3634'$	89	103
16	Bottom of NCAR Hill	Y	N	$N39°59.0710'$ $W105°16,0573'$	75	84
17	1124 W. Enclave Cir.	Y	Y	$N39°58.4765'$ $W105°10.0989'$	86	104
18	Lowes Parking Lot	Y	N	$N39°57.7700'$ $W105°09.9448'$	82	93
19	Colorado Plastic	Y	Y	$N40°01.3681'$ $W105°15.1097'$	80	88
20	2240 Floral Drive	N	N	$N40°01.7978'$ $W105°16.0332'$	63	74
21	19th & Grape	Y	N	$N40°02.0266'$ $W105°16.3373'$	69	84
22	3155 W. Sterling Circle	Y	Y	$N40°01.9156'$ $W105°13.6665'$	84	95
23	Gart Bros. Parking Lot	Y	Y	$N40°02.1557'$ $W105°15.4693'$	89	98
24	9920 Phillips Rd.	Y	Y	$N40°03.7225'$ $W105°07.2034'$	87	103
25	Grange on 42	Y	Y	$N40°02.2107'$ $W105°07.8549'$	83	95
26	7-11 on 42	Y	Y	$N40°00.9667'$ $W105°07.8021'$	83	89
27	Sweetwater Cir.	NA	Y	$N40°00.0929'$ $W105°07.7760'$	67	78
28	Safeway, S. Boulder Rd.	NA	Y	$N40°00.8402'$ $W105°15.5642'$	68	85
29	S. Boulder (LDS Church)	NA	Y	$N39°59.3024'$ $W105°09.2450'$	84	98
30	95th & S. Boulder Rd.	NA	Y	$N39°59.2827'$ $W105°07.7519'$	90	100
31	YMCA @ Arapahoe & 95th	Y	Y	$N40°00.779'$ $W105°08.008'$	78	96
32	Eagleview & Barnswallow	Y	Y	$N40°07.896'$ $W105°07.497'$	78	92
33	Boulder County Fairgrounds	Y	Y	$N40°09.500'$ $W105°07.754'$	79	95
34	Safeway N. Hover Rd.	Y	N	$N40°11.177'$ $W105°07.804'$	78	93
35	Peppier & Winding Dr.	Y	Y	$N40°12.100'$ $W105°05.310'$	81	94
36	I25 & 66th	Y	Y	$N40°12.333'$ $W104°58.456'$	93	105
37	Sportman's Warehouse	Y	Y	$N40°24.759'$ $W105°00.242'$	83	93
38	Harmony & Timberline	Y	N	$N40°32.453'$ $W105°02.297'$	70	84
39	4900 Boardwalk	Y	N	$N40°31.083'$ $W105°03.746'$	70	83
40	Ranch & Holyoke	N	N	$N40°29.559'$ $W105°05.254'$	63	66
41	Lake Loveland	Y	N	$N40°25.130'$ $W105°05.670'$	70	86
42	Berthoud Park	Y	N	$N40°25.131'$ $W105°05.670'$	74	77

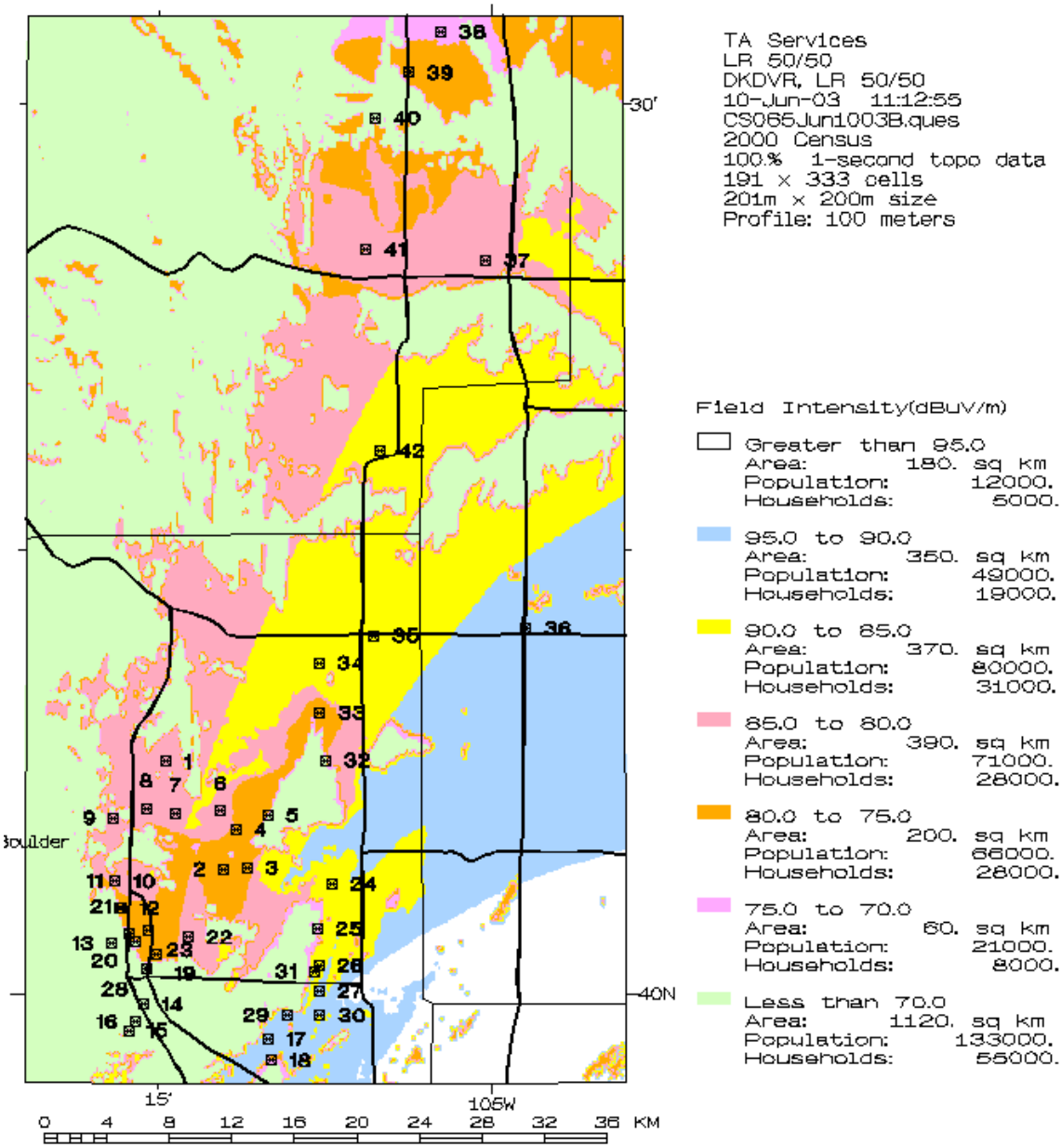

Figure 2: Map showing test locations.

4 CONCLUSION

This test provides an indication of how well DTV signals can be received in the Boulder area from an existing station located on Lookout Mountain and operating with an effective radiated power of 233 kW. It also makes clear that power alone is not the only variable to consider. This is particularly evident at location 9 (Figures 34 - 37) where no video was obtained from either of the test receivers even though there is a significant field strength at this location. Compare this for instance with location 19 (Figures 74 - 77) where there is less field strength than at location 9 and video was obtained from both receivers. Of particular interest are the differences between the two graphs seen in Figure 35 and Figure 75. Figure 35 shows that in spite of there being more power at this location, the shape of the DTV signal has been distorted, presumably by multi-path effects, such that the receiver is unable to reconstruct the digital video stream even though there is more power available at this location. Power level is clearly not the only important variable for the reception of DTV.

A much more comprehensive study could be conducted to help quantify DTV image quality. Such an experiment could look for not only correlation between signal power and received video quality, but also correlations with such deleterious effects as multi-path interference, shielding, and noise.

5 REFERENCES

[1] C. L. Holloway, F. H. Sanders, and P. M. McKenna, "Predicted and measured field strengths in the Boulder, Colorado, area from two proposed terrestrial digital television tower sites," NTIA Report 01-387 and NIST Technical Note 1519, May 2001.

[2] B. N. Taylor and C. E. Kuyatt, "Guidelines for evaluating and expressing the uncertainty of NIST measurement results," NIST Technical Note 1297, National Institute of Standards and Technology, 1994.