APPENDIX C: RADIO SPECTRUM MEASUREMENT SYSTEM

C.1 Introduction

The NTIA RSMS is a mobile, self-contained computer-controlled radio-receiving system capable of many measurement scenarios over a frequency range of 30 MHz to 22 GHz. This appendix contains specifications on the vehicle, instrumentation, and operation of the RSMS when it is deployed for broadband spectrum survey measurements.

C.2 Vehicle

For maximum effectiveness, the spectrum measurement system must be readily transported to near or distant locations that may not be easily accessible, e.g., open fields or hilltops without an access road. To meet this need, the measurement system, including antennas and support hardware, is carried in a shielded, insulated, climate-controlled shell mounted on a Chevrolet truck cab and chassis. The assembled measurement system and vehicle unit is called "the RSMS." The vehicle has a high power-to-weight ratio, four-wheel drive, and a low-geared transmission for use on rough terrain and steep grades. The RSMS is sufficiently small and light enough to fit on C-130 or larger aircraft for rapid transport over long distances. The chief disadvantage of a smaller unit is the loss of operating room inside the shell.

Figure C-1 shows the internal layout of the RSMS. Four full-height equipment racks are located transversely above the rear axle. These racks divide the box-like equipment compartment into two parts: one in front and one behind the racks. The forward area comprises the operator's compartment with access to the equipment front panels, the main power panel and breaker box, work counters, two chairs, telephone, fax machine, and a cellular fax/modem. A built-in safe below the equipment racks provides storage for classified materials. A full-height cabinet in the forward driver's side corner provides for storage of small, frequently used items. A compartment for the smaller of two telescoping masts is located behind this cabinet, and is accessed from outside the van.

Additional storage cabinets are available to the rear of the racks for larger and less-used items. Compartments for the large mast and the external-tap power cable and its electrically driven reel are located behind these cabinets, with outside access. The weight of the mast-rotator, power cable, and reel is counterbalanced on the driver's side by the 10-kW generator and two air conditioners. The rear area provides access to the back of the equipment racks. The generator compartment is accessed via an outside lift-up panel. The air conditioners are not readily accessible.

The tightly-shielded, windowless measurement compartment provides good radio frequency (RF) isolation between the measurement system and the outside environment. This shields equipment and personnel from high-level fields, as well as preventing internal computer noise from contaminating the measurements. The small working compartment also reduces requirements for air conditioning and heating. Both of the telescoping masts are installed on rotators (at their bases) and will raise the antennas to a little over 8 m above ground.

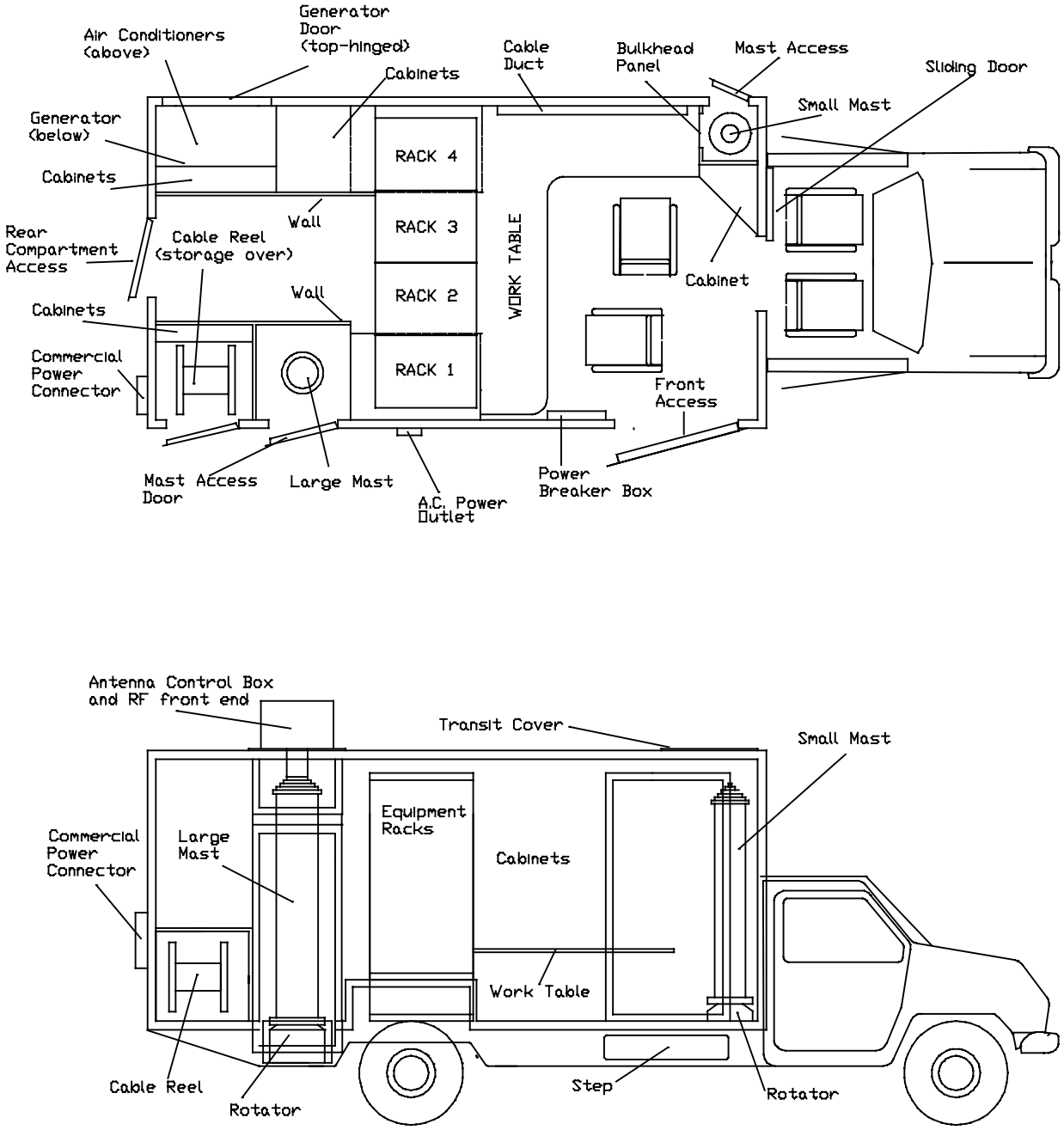

Figure C-1. Top and side view drawings of the RSMS.

C.3 Instrumentation

The RSMS normally is configured as two independent spectrum measurement systems: one optimized to measure lower frequency portions of the spectrum (System-1), and the other to measure higher frequencies (System-2), with some frequency overlap between the two systems. Figure C-2 is a fish-eye front panel view of the rack mounted instrumentation. Measurement and control instruments for System-1 are in the two racks on the right of center; and for System-2, they are in the two racks left of center. Both systems use RF front-ends that incorporate dynamic RF attenuation, low noise preamplification and tunable frequency preselection. These features allow the RSMS to achieve the best possible combination of dynamic range, sensitivity, and off-tuned signal rejection in its measurements.

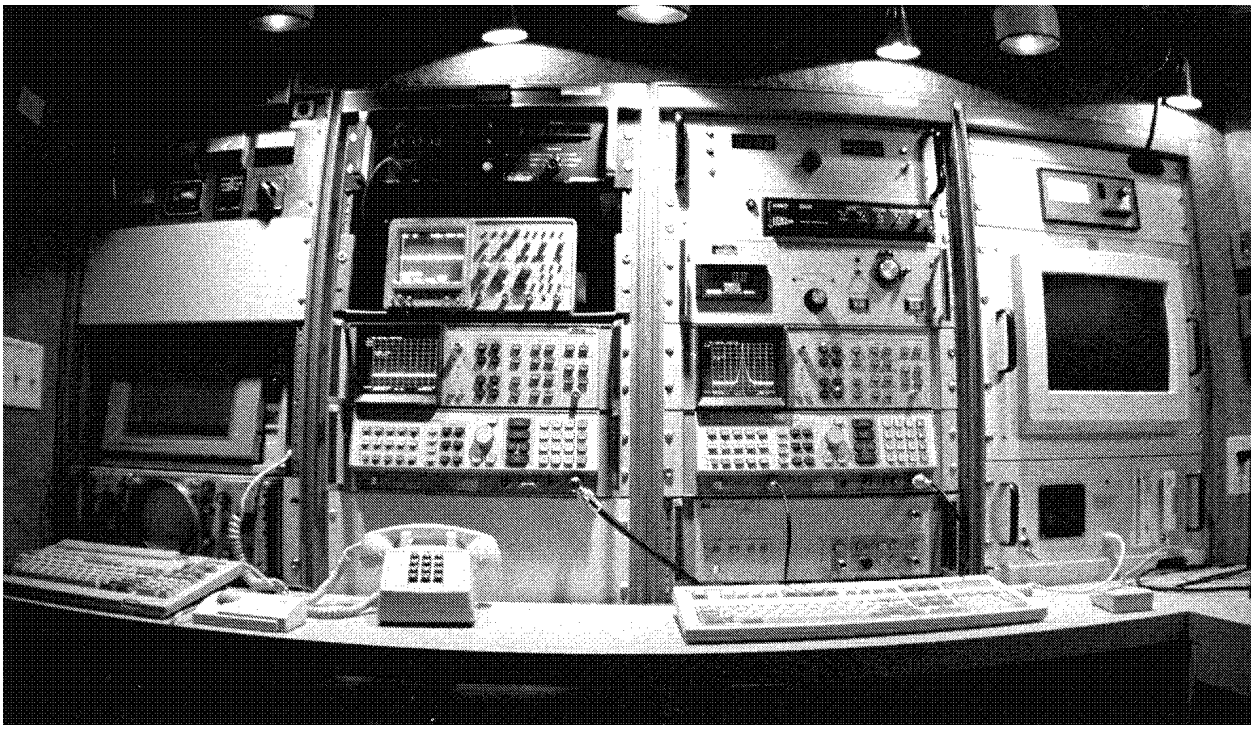

Figure C-2. Front panel of the RSMS instrument racks.

For spectrum surveys, the low-frequency system usually is operated between 100 MHz and 1 GHz, with its antenna(s) mounted on the smaller forward mast and its RF front-end located inside the operator's compartment. The high-frequency system is used for the remaining survey frequencies from 1-19.7 GHz, with its antenna(s) mounted on the larger mast and its RF front-end located at the top of that mast to overdrive the higher line losses that occur above 1 GHz. The RSMS receiver is depicted as a block diagram in Figure C-3. As the diagram shows, both the high and low frequency systems are designed around a Hewlett-Packard 8566B spectrum analyzer (0-22 GHz), although the RSMS software will control other spectrum analyzers, such as the HP-70000 series. The selection of 1 GHz as the break point between the two systems in a site survey mode is determined primarily by the availability of antennas, which often begin or end their frequency response around 1 GHz.

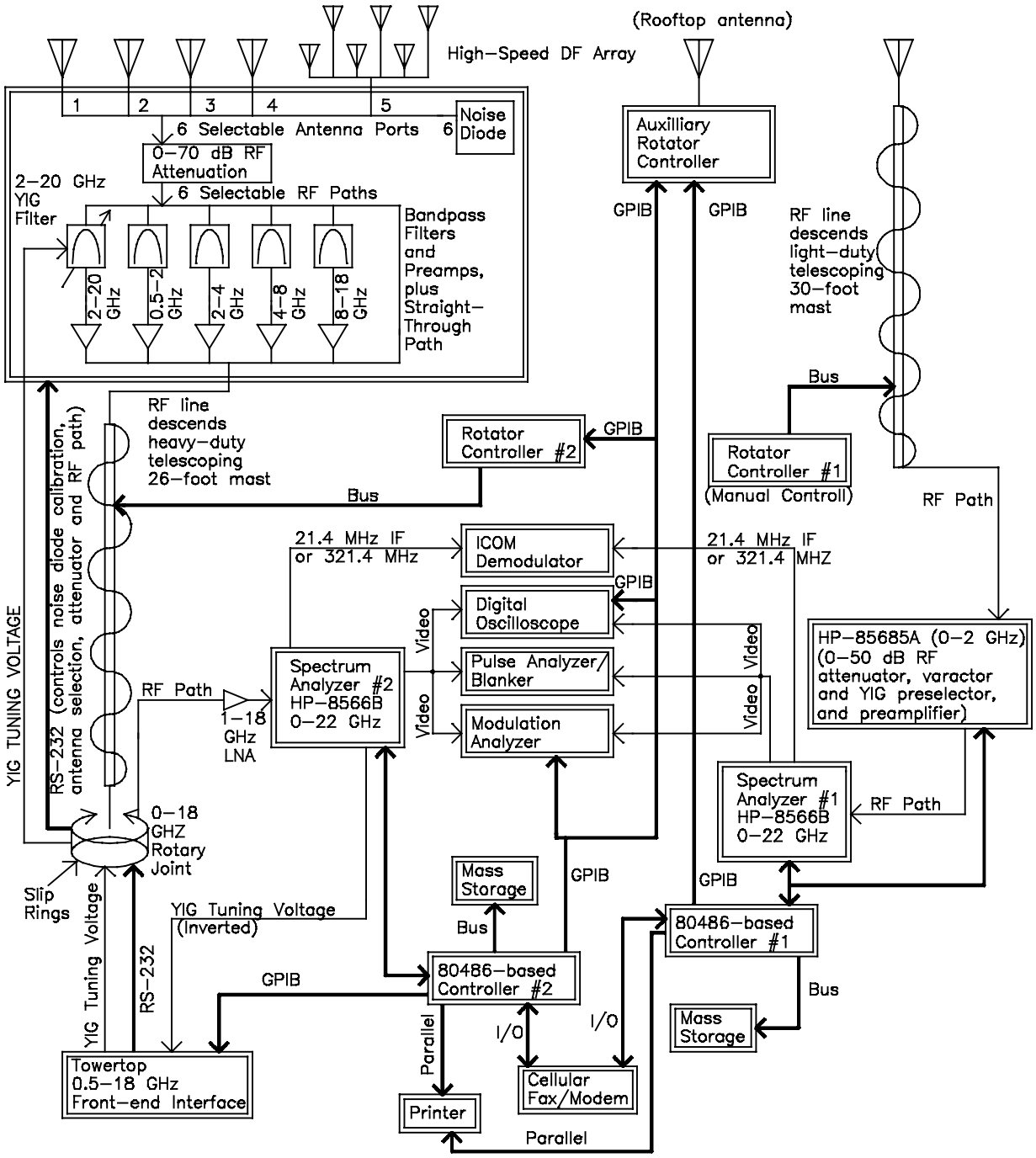

Figure C-3. Block diagram of the RSMS receiver.

Each of the measurement systems can be controlled in fully automatic, semiautomatic, and fully manual modes. In fully automatic operation, each system is controlled by ITS-written software (named DA, for Data Acquisition) that runs under Microsoft-DOS on 80486-based computers. Spectrum surveys normally are conducted in the fully automatic mode. RSMS operators are able to interrupt automatic measurements to perform work in semiautomatic and manual modes. These modes allow special measurements with varying degrees of automated assistance.

Each of the two measurement systems have independent antennas, RF front-ends, masts, spectrum analyzers and computers, but share the use of auxiliary equipments for special measurements, analysis, and troubleshooting. Support equipments include a digital oscilloscope, pulse train analyzer, demodulator, modulation domain analyzer, rotator controllers, signal generators (frequencies range from a few kilohertz to 18 GHz), power supplies, low noise amplifiers, cables, connectors, and hand tools. Data from the oscilloscope can be downloaded to the controller computers. Data from the auxiliary devices often are used to determine specific characteristics of selected emitters during the course of a spectrum survey or other measurement.

The RF operational characteristics of the two measurement systems are shown as a function of frequency in the Table. The lower-frequency system can be operated across a frequency range of 100 Hz to 2 GHz, with fixed bandpass and varactor preselection at frequencies below 500 MHz and tracking yttrium-iron-garnet (YIG) preselection from 0.5-2 GHz. This system includes 0-50 dB of dynamically selectable RF attenuation in the front-end, and achieves a typical overall noise figure of 10 dB across its entire frequency range. The higher-frequency system can be operated across the 0.5-22 GHz range, with YIG preselection from 2-20 GHz. This system incorporates 0-70 dB of dynamically selectable RF attenuation in the front-end, and uses low noise preamplifiers to achieve a typical noise figure of 10-15 dB up to about 10 GHz, and a noise figure that increases from 15-25 dB at frequencies from 10-20 GHz. Better noise figures can be obtained by using the fixed bandpass filters for preselection instead of the YIG, but that arrangement is tenable only if there are no in-band signals strong enough to overload the preamplifiers.

C.4 Antennas

The RSMS normally carries a complement of broadband antennas that cover a 0.1-20 GHz frequency range. Other antennas necessary for measurements at higher or lower frequencies are stored at the ITS laboratory. Omnidirectional, slant-polarized biconical antennas are most frequently used for site surveys. These antennas provide a good response to circular, vertical, and horizontal signal polarizations. At frequencies from 0.1-1 GHz, a slant-polarized log periodic antenna (LPA) may be used if (as in the Los Angeles survey) most of the radio activity in the area is confined to an area subtending 180ßor less relative to the RSMS. Besides the 0.1- to 1-GHz LPA, the following omnidirectional slant-polarized biconical antennas also are carried: 0.1-1 GHz, 0.5-20 GHz, 1-12 GHz, 2-8 GHz, and 8-20 GHz.

In addition to the LPA and omnidirectional antennas, a variety of broadband cavity-backed spiral (CBS) antennas are carried. These have antenna patterns that are most useful for direction-finding using differential methods at relative observation angles of 60ßor 90ß. They also are

Available RSMS RF Signal-processing Paths

Frequency Range	RSMS System	Dynamic RF Atten. (dB)	Type of Preselection and Low-noise Preamplification	Noise Fig.* (dB)
100 Hz - 2 MHz**	1	0-50	Fixed bandpass; HP-85685A preamps+	10
2 MHz - 20 MHz**	1	0-50	5% varactor; HP-85685A preamps+	10
20 MHz - 100 MHz**	1	0-50	5% varactor; HP-85685A preamps	10
100 MHz - 500 MHz	1	0-50	5% varactor; HP-85685A preamps	10
500 MHz - 2 GHz	1	0-50	0.2% tracking YIG; HP-85685A preamps	10
500 MHz - 2 GHz	2	0-70	Fixed bandpass; 0.5-2 GHz preamp±	10
2 GHz - 4 GHz	2	0-70	Fixed bandpass; 2-4 GHz preamp±	10
4 GHz - 8 GHz	2	0-70	Fixed bandpass; 4-8 GHz preamp±	10-15
8 GHz - 18 GHz	2	0-70	Fixed bandpass; 8-18 GHz preamp±	15-25
2 GHz - 20 GHz	2	0-70	0.2% tracking YIG; 1-20 GHz preamp≤	15-25

* Noise figure is measured using a +25-dB ENR noise diode and variant Y-factor calibration performed at the antenna terminals.

** Due to the shortage of storage space for large antennas, this frequency range is not normally measured as part of an RSMS spectrum survey.

\+ The low-frequency input on the HP-85685A preselector must be used.

+/- Generally, this path is only used to perform azimuth-scans or special measurements during an RSMS spectrum survey, but may be used for normal survey bands if no high-amplitude signals are anticipated in the measured frequency range.

≤ This path normally is used for all spectrum survey bands (except azimuth-scans, see note + / - above) in the 1- to 19.7-GHz frequency range. The YIG and preamplifier nominally operate in the 2- to 18-GHz frequency range, but have demonstrated adequate performance across a 1- to 20-GHz range.

useful as auxiliary antennas for manual monitoring of emitters or spectrum of special interest and for use on side excursions to measure specific emitters of interest in the area of a site survey. The frequency ranges of these CBS antennas are 1-12 GHz, 8-18 GHz, and 400 MHz to 2 GHz. The latter normally is not carried due to its size.

A 1-m parabolic reflector antenna with a choice of feeds (linear cross-polarized and circular) normally is carried. This antenna may be used to perform the azimuth-scanning measurements in the common carrier (point-to-point microwave) spectrum survey bands, but is used primarily for measurements on specific emitters (e.g., selected radars).

The receiving antennas are the only components of the RSMS that are not calibrated in the field. Because most RSMS measurements are performed to acquire relative emission levels, rather than absolute incident field strength values, the main requirement for RSMS antennas is that they have a fairly flat gain response as a function of measured frequency. If absolute incident field strengths must be known for received signals, then the gain factors (or, equivalently, the antenna correction factors) for the applicable antennas are determined from manufacturer-generated tables and curves, and the RSMS measurements are corrected in a post-acquisition analysis phase.

C.5 Attenuators, Preselectors, and Preamplifiers

All RSMS measurements are made using the RF front-ends depicted in Figure C-3. These front-ends incorporate dynamically switched RF attenuation, preselection, and preamplification. The Hewlett-Packard 85685A is used for frequencies below 2 GHz, and a unit designed and fabricated by ITS is used at frequencies between 2 and 20 GHz. The two boxes (HP 85685A and ITS designed unit) are functionally similar, but differ in significant details. For example, the 85685A provides 0-50 dB of RF attenuation, and the ITS box provides 0-70 dB of RF attenuation. This active attenuation allows the total dynamic range of the RSMS to be extended to as much as 130 dB.

Effective bandpass preselection is required if low noise preamplifiers (LNAs) are used; this is the case for essentially all RSMS measurements. Preselection prevents strong off-tuned signals from overloading the front-end LNAs. At frequencies below 500 MHz, preselection in the HP-85685A is provided by fixed filtering, up to 2 MHz, and by 5% tracking varactors from 2-500 MHz. Tracking YIG filters are used in the frequency ranges of 500 MHz to 2 GHz and 2 GHz to 20 GHz. YIG filters provide the narrowest preselection (15 MHz wide at 500 MHz to about 25 MHz wide at 20 GHz), but at a cost of about 6 dB of insertion loss. Using fixed bandpass filters can reduce the preselection insertion loss to about 1 dB; fixed bandpass filters in an approximately octave progression are available in the ITS front-end (see Figure C-3). These can only be used if no signals are present in the band which are strong enough to overload the LNAs.

LNAs are used to achieve the best possible sensitivity, coupled with (ideally) just enough gain to overdrive the noise figure of the rest of the measurement system. Operationally, at frequencies below 1 GHz, line losses are sufficiently low to allow placement of the RF front-end inside the operator's compartment with an RF line to the antenna mounted on the mast. At frequencies above 1 GHz, however, the line loss is 10 dB or more, and thus the LNAs (and the rest of the RF front-end) must be positioned at the top of the mast. (Consequently, the mast must be sturdier than the lower-frequency system mast.) If a single LNA at the top of the mast were used, it would have to produce at least 41 dB of excess noise to overdrive system noise (6 dB of insertion loss, 10 dB of RF line loss, and at least 25 dB of spectrum analyzer noise figure). Thus, to achieve an overall noise figure of 10 dB, a single LNA would have to have a noise figure of about 8 dB, and a gain of at least 33 dB. Because LNAs to accomplish this are not available, low noise preamplification is provided by cascaded preamplifiers located at two points in the high-frequency system: one at the top of the mast (overdriving YIG insertion loss, mast

line loss, and the 4-dB noise figure of the second LNA) and one at the input to the spectrum analyzer (to overdrive the analyzer noise figure).

C.6 Calibration

RSMS calibrations are performed with noise diodes and a Y-factor excess noise ratio (ENR) technique described in detail in Appendix E. Typically, a noise diode ENR source is used to calibrate an entire signal path for measurements about to be performed. Resultant frequency-dependent noise figure and gain calibration curves are used to automatically correct the measured amplitudes of all received signals. This calibration technique has proven very successful for field-deployed systems. It is a fast way to determine sensitivity and gain-correction values for a measurement system, and it also is very useful for isolating the gain and loss factors of individual system components.

C.7 Additional Measurement Capabilities

When deployed for general spectrum occupancy measurements (broadband spectrum surveys), the RSMS also is equipped to perform other measurements. Following are brief descriptions of other measurement capabilities currently available.

Extended Emission Spectra: Measurements of radiated and in-guide emission spectra of individual radio transmitters, particularly radars, are a major capability of the RSMS program. A combination of high sensitivity and interactive front-end RF attenuation make it possible to measure routinely the emission spectra of radio emitters across several gigahertz of spectrum. Specialized RSMS measurement techniques and algorithms support spectrum measurements of intermittently received emitters, such as scanning radars, without the need to interrupt or interfere with their operations. The RSMS uses a stepped measurement routine that allows for measurements that are faster, have more dynamic range, and are more repeatable than swept measurements. Accurately tracked YIG and varactor-tuned preselection make stepped measurements highly resistant to problems of overload from strong center-frequency signals while measuring low-amplitude emissions in adjacent parts of the spectrum. A dynamic range of 110-130 dB is achievable through the use of switched attenuation (invoked as a function of input signal level).

Azimuth Scan: This special measurement routine is used to determine the receivability of selected signals at particular locations, even if those signals propagate via unconventional (nonline-of-sight) routes. The RSMS parabolic dish antenna is rotated through 360ßon the horizon while recording received signal strength. This results in data showing the receivability of signals at all azimuths, and reveals nonline-of-sight propagation routes, if any exist. Azimuth scanning may be used to support spectrum surveys.

Transmitter Equipment Characteristics: The RSMS is capable of measuring and recording signal characteristics of multiple transmitter types. As part of any measurement scenario, certain received signals may be singled out for monitoring and detailed analysis. These special measurements may be used to determine radiated emission characteristics of known transmitters

or identify the source of unknown transmissions. Measured transmitter (signal) characteristics include: tuned frequency or frequencies, beam-scanning method (regular rotation, sector scan, etc.), beam scan interval, radiated antenna pattern, modulation type (AM, chirped, etc.), pulse width, pulse repetition rate, pulse jitter, pulse stagger, and intrapulse modulation. Although the RSMS can observe the presence of phase coding in pulsed signals, no phase measurement capability is included explicitly in RSMS capabilities.