FOR INFORMATION

TSC-2026/1-1.4.9

FINAL REPORT

METHODOLOGY FOR DETERMINING SPECTRUM EFFICIENCY

STANLEY I. COHN

PURCHASE ORDER NO. 43 SANT503717

SACHS/FREEMAN ASSOCIATES, INC.

1401 MCCORMICK DRIVE, LANDOVER, MARYLAND 20785 301-925-9400

SECTION I

INTRODUCTION

1.1 GENERAL

The National Telecommunications and Information Administration (NTIA) is concerned with improving the efficiency of the Federal Government's use of the radio spectrum. This effort is partially in response to U.S. Senate Report 97-584 as well as being in consonance with NTIA's Long Range Planning.

The Technical Subcommittee (TSC) of the Interdepartment Radio Advisory Committee (IRAC) has been tasked to provide NTIA quantitative definitions of terms relating to spectrum efficiency. NTIA is developing a computer program which uses these TSC definitions to study the efficiency of the Government's use of the spectrum. There are several factors which must be addressed in order to allow the TSC definitions to be used in the computer programs.

1.2 SPECTRUM USE EFFICIENCY

The efficiency of spectrum use or Spectrum Efficiency (SE) has been addressed in reports associated with various radio services. For the most part consideration of SE has only been treated with regard to bandwidth. Other factors must also be considered to be able to specify spectrum efficiency.

The definition of SE as given in International Radio Consultative Committee (CCIR) Report 662 is the ratio of communication achieved to the spectrum space used, where the spectrum space used is the product of bandwidth used, spatial volume denied to other users because of interference and time used. The concept of considering denial to other users is proposed

by Joint Tactical Advisory Committee (JTAC)[1,2]. A definition of spectrum efficiency is also proposed in the JTAC Report which is ratio of the product of volume, bandwidth and time required by an "ideal" system for accomplishing the required mission to the same product for the system under consideration. Both the CCIR and JTAC definitions take into account the denial of service to other users. They, when computing the relative efficiency of two or more systems proposed to provide the same mission, will give identical results which generally are different from those obtained by only considering bandwidth.

The CCIR method produces a "yield" efficiency with dimensions such as bits-per-hertz-meter-cubed-seconds. While a yield efficiency may be useful for comparing systems in the same radio service, its use in comparing efficiency between different radio services is questionable. This is because different missions are involved.

The JTAC method on the other hand, produces a dimensionless number (or percentage). It can be used to compare systems within a radio service as well as between radio services, since it relates systems by how well they use the spectrum to accomplish the required mission. In essence the excess spectrum used or denied others in terms of bandwidth, spatial volume (or area) and time is what contributes to loss of efficiency. In applying the JTAC method to most terrestrial systems, the geographic area denied rather than the spatial volume denied can be used.

---

[1] S.I. Cohn, "Memorandum to JTAC Task Group 63.1.2" November 1967.

[2] Joint Technical Advisory Committee, "Spectrum Engineering - The Key to Progress" IEEE, March 1968.

The SE work of the TSC[3] is based on the JTAC definition, since Government systems, in many cases, involve a mix of radio services in various bands. They have, however, chosen to use a reference system representing a "procurable state-of-the-art" system rather than an "ideal" system. Their work has initially concentrated on fixed systems and has only considered the denial of placement of receivers due to transmitters. They have chosen to call their measure the Technical Spectrum Efficiency Factor (TSEF). This has been done to emphasize that other factors, such as cost, operational conditions, etc., also enter into system design and influence efficiency, but are not included in the TSEF calculation.

The NTIA is in the process of applying this TSEF definition to determine the distribution of TSEF's of various Government fixed systems in a government fixed service band. L. Berry, through TSC WG-13, has developed a computer program for NTIA to use with the Government Master File of Frequency Assignments (GMF) to provide this distribution.

While the results of this application of TSEF will be very useful, there are still several major considerations that need to be addressed before NTIA can provide information concerning the efficiency of the Governments use of the spectrum. From a technical standpoint, two other issues must be addressed. The first is a consideration, in the TSEF, of receivers denying the placement of transmitters. The second involves the extension of the TSEF to the case where common denial areas among two or more systems is involved.

---

3 This work was accomplished in TSC Working Group 13 which was convened by L. Berry of NTIA/ITS.

1.2 OBJECTIVES OF THE PROJECT

This project has three objectives. They are to develop and recommend:

(1) a method of determining efficiency of spectrum use of a system which takes into account both receiver and transmitter denial and

(2) a method of determining efficiency of band use when a number of systems occupy a given geographic area and frequency band, and

(3) a definition of band efficiency.

SECTION II

SYSTEM SPECTRUM EFFICIENCY

2.1 TECHNICAL SPECTRUM EFFICIENCY FACTOR

The Technical Subcommittee (TSC) of the IRAC has adopted the following concept for the Technical Spectrum Efficiency Factor (TSEF):

$$\text{TSEF} = \frac{\text{(spectrum resource used by reference system)}}{\text{(spectrum resource used by evaluated system)}}$$

where the reference system is a practical, state-of-the-art system that accomplishes the same mission as the evaluated system.

The "spectrum resource used" is the product TBS, where T is the time denied by the system to other potential users, B is the bandwidth denied to other users by the system, and S is the physical space denied to others. In many applications, S will be geographical area, in others it may be volume, or degrees of arc on the geostationary orbit.

The Technical Spectrum Efficency Factor (TSEF) is thus, defined as

$$\text{TSEF} = (B_r \times T_r \times S_r)/(B_s \times T_s \times S_s) \qquad (2\text{-}1)$$

where:

B_r is the bandwidth the reference system denies to others,

T_r is the time the reference system denies to to others,

S_r is the physical space the reference system denies,

B_s is the bandwidth the evaluated system denies to others,

T_s is the time the evaluated system denies to others, and

S_s is the physical space the evaluated system denies.

The reference system is to be the best of the systems that can be procured, or produced at a reasonable price. In this context, "best" means the system that has the minimum TBS product.

The reference system is thus a procurable system that has been designed to minimize use of the spectrum resource--the time-bandwidth-space denied to other potential users. This means that the TSEF will usually be less than one, because operating communications systems are usually designed with the aim of balancing several competing goals--for example, cost, accessibility, security, reliability--as well as technical spectrum efficiency. Meeting design goals for the other factors may naturally decrease the technical spectrum efficiency.

Calculations made to date by the TSC and NTIA have concentrated on the denial of TBS to receivers due to an existing transmitter. The calculation of system efficiency must however, consider both transmitter and receiver denial due to an existing receiver and transmitter.

2.2 SYSTEM EFFECIENCY

Certain radio services, such as Broadcasting and Multipoint Distribution, operate with a central transmitter communicating with a set of receivers dispersed in an area.

The Land Mobile Radio (LMR) Service is similar, in that the mobile receivers can be located anywhere in the geographic service area, but for each

mobile receiver there is a colocated mobile transmitter. For simplex system the mobile transmitter and mobile receiver operate on the same frequency; for duplex systems they operate on different frequencies.

Radars in the Radio Determination Service utilize a colocated transmitter and receiver tuned to the same frequency and generally covers a 360° sector.

For each of the above and similar radio services, it is possible to determine a transmitter-to-transmitter separation distance that will preclude mutual interference between systems. The separation distance constraints between central or base transmitters can then be used to determine system denial. By replacing the system components with those of a reference system and computing the denial of the reference system, a comparison of denial between the actual and reference systems can be made to determine system efficiency. Thus, the use of transmitter separation contraints, which take into account receiver denial and, in turn, transmitter denial, provides a means of determining system spectrum efficiency.

The UHF TV taboos, by restricting the location of transmitters through the use of prescribed separation distances for cochannel, adjacent channel, IF beat, intermodulation, receiver local oscillator, sound image and picture image interference rejection provides an example of denied areas.

The restriction for a TV station in Zone II in the middle of the UHF band produces a total denied area of over 208,000 square miles for various 6 MHz bandwidths (see Table 2-1). The service area is generally considered to encompass approximately 4,000 square miles. The cochannel separation distance

TABLE 2-1
CHANNEL-AREA DENIAL OF UHF TV
(CHANNEL 50 ZONE II)
BASED ON TV TABOOS

CHANNEL DENIED	REASON	RADIUS (miles)	AREA DENIED (sq. miles)
50	Cochannel	175	96,211
49	Adjacent Channel	55	9,503
51	Adjacent Channel	55	9,503
58	IF Beat	20	1,157
42	IF Beat	20	1,257
45	Intermod	20	1,257
46	Intermod	20	1,257
47	Intermod	20	1,257
48	Intermod	20	1,257
52	Intermod	20	1,257
53	Intermod	20	1,257
54	Intermod	20	1,257
55	Intermod	20	1,257
57	LO	60	11,310
43	LO	60	11,310
64	Sound Image	60	11,310
36	Sound Image	60	11,310
65	Picture Image	75	17,671
35	Picture Image	75	17,671
		Total Area Denied	208,369

of 175 miles accounts for 46% of the denied area with the remaining 54% on various other channels. Considering a reference system, with directional (10 db) receiving antennas for fringe area operation, a cochannel separation of 100 miles could be achieved. The reference system would only require the cochannel restrictions. Based on this, the denied area of the reference system would be 31,416 square miles and the TV taboos for a single channel results in an efficiency of about 15%, neglecting any possible reduction in bandwidth.

In a similar manner the rules for LMR provide for cochannel and adjacent channel separation distances which lead to specific denial areas. Intermodulation is generally considered to be be a cosite problem and produces relatively small denial areas.

The base-to-base transmitter distance separations for LMR stations are determined by considering the interference protection distances. There are four types of interfering situations which must be considered in the LMR service:

(1) the talkin link from the mobile to the base getting interference from another base station,

(2) the same link receiving interference from another mobile,

(3) the talkout link from the base to the mobile interfered with by another base or,

(4) by another mobile.

The situation in case (1), where the interference is from a high antenna with a high output transmitter radiated power and the desired signal is from a lower power transmitter at a low antenna height (the mobile), is the worst case for simplex communications and duplex talkin (mobile-to-base) links. In the duplex communications situation the talkout and talkin frequencies are

separated and base-to-base station interference cannot occur for the talkout links. The worst case for duplex type systems talkout link is therefore case (3) where the mobile receiver is interfered with by a high power base station.

For a simplex LMR system and for mobile-to-base duplex links the required base station separation distance is that which will provide a signal-to-interference ratio at the base receiver which is sufficient for reliable mobile-to-base communication. For a base-to-mobile duplex link the base station separation is determined by adding the maximum operating range to the distance that will provide a signal-to-interference ratio that is sufficient for reliable base-to-mobile communications when the mobile unit is at its maximum operating range. Base-to-base distance separation for cochannel and adjacent channel (considering off frequency rejection) operation can therefore, be determined.

The coordination requirements of Part 90 of the FCC Rules and Regulations provide an example for determining efficiency of a VHF high-band LMR station. A cochannel coordination requirement of 75 miles is specified, while a 15 kHz adjacent channel coordination requirement of 35 miles is specified.

Based on these distances, the cochannel denial area would be 17,671 square miles. The adjacent channel denial would be 3,848 square miles for each adjacent channel. The total area denied, considering cochannel and both adjacent channels, is 25,367 square miles.

Since, in the majority of cases, omnidirectional antennas are used for the LMRS, the area efficiency for a single system can be computed using the coordination distances. Considering that the cochannel denial for the

reference system involves a radius of 75 miles and no adjacent channel denial is involved, the efficiency of a single system would be 69.7% neglecting any possible reductions in bandwidth.

The above examples considered omnidirectional antennas. Similar calculations can be made when directive antennas are used by taking into account the antenna pattern.

While it is relatively simple to determine transmitter-to-transmitter separation distances for the Radio Services previously mentioned, the extension of such a concept to fixed services is not straight forward.

The Fixed Radio Service generally involves communication between two points. Antennas used are usually directive with the antennas of the receiver directed at the transmitter and vice versa. A denial area can be defined around the transmitter, with a shape deterimined by the antenna pattern and propagation characteristics, which preclude placement of other receivers. Similarly a denial area for transmitters can be defined around the receiver location. This is depicted in Figure 2-1 for a two level antenna approximation. Similar but smaller, denial areas can be defined for non-cochannel frequencies.

A new system can be implemented provided that the transmitter and receiver are placed outside the respective area denied to their placement. Further the direction of the antenna influences placement. A receiver antenna directed toward an existing transmitter attenna will require a larger distance separation than would be required if the side lobe of the receiver was directed towards the existing transmitter. Similar conditions exist for transmitter antenna placement and direction.

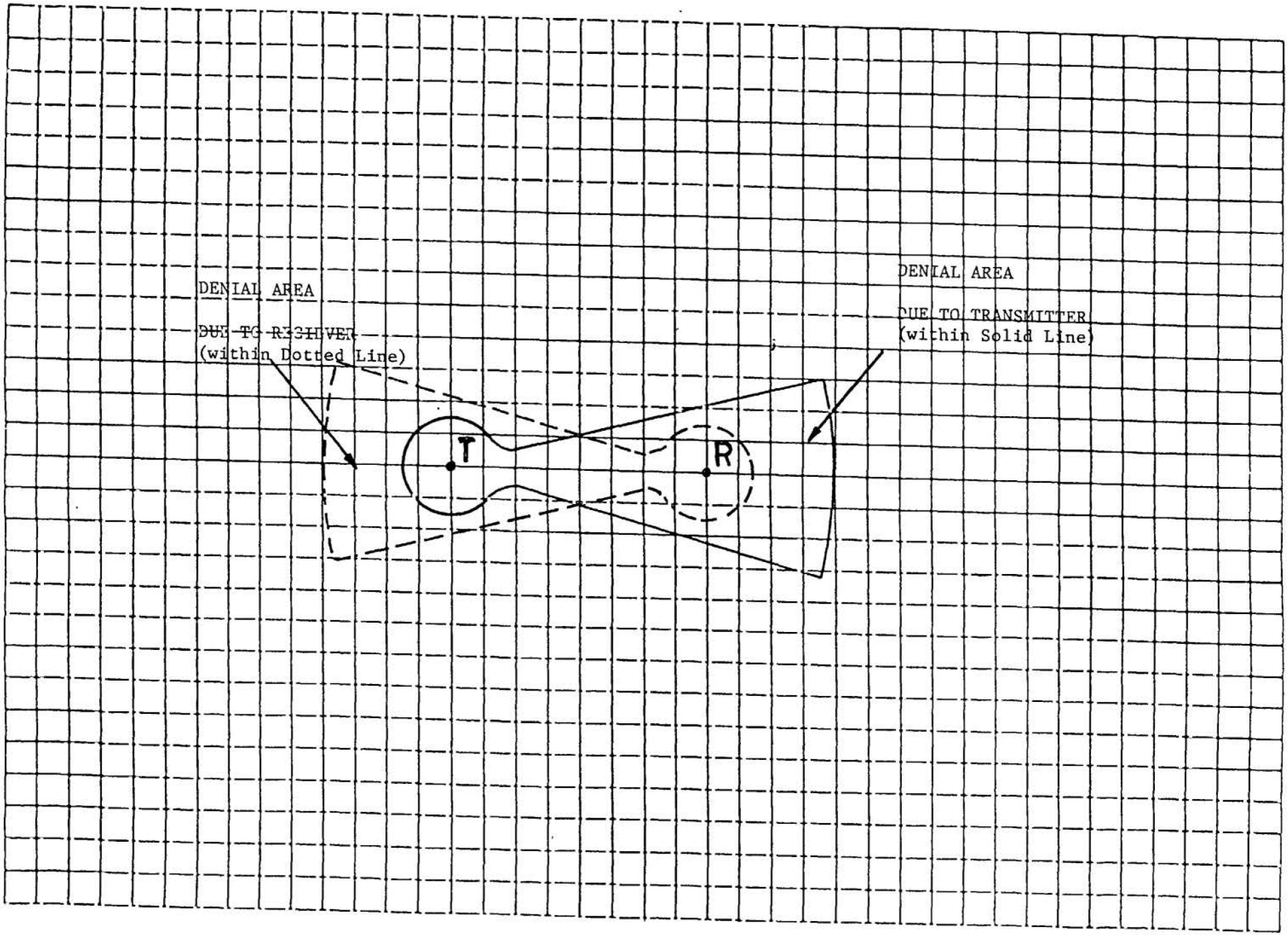

FIGURE 2-1 DENIAL AREAS FOR A FIXED SYSTEM

Because of these factors it does not appear to be possible to determine a unique system area denial for fixed systems in a manner similar to the previous broadcasting and LMR examples. The denied area can be separately specified for the transmitter and for the receiver. It is beleived that for most systems, because they are generally designed in a balanced manner, the total area denied by a transmitter will approximate the area denied by a receiver.

It is recommended that NTIA include both receiver and transmitter denial in their computer assisted examination of Fixed systems. Should the transmitter and receiver denial areas be approximately equal for the various system investigated, the system efficiency can be determined by using either the transmitter or receiver denial area. Since NTIA authorizes frequencies to transmitters, the denial of placement of a transmitter due to an existing receiver would be the preferable alternative. Should the denial areas for transmitter and receivers not be approximately equal the system efficiency should be based on the largest denial area (transmitter or receiver).

TABLE 3-1

DENIAL DUE TO
CHANNELS 30, 36, 42, 48 & 54 ON SAME TOWER

CHANNEL DENIED	REASON FOR DENIAL: Type of Interference With Channel:*					MAX DIST DENIED (Miles)	AREA DENIED (Sq. Miles)
	30	36	42	48	54		
15	P					75	17,671
16	S					60	11,310
21		P				75	17,671
22	IF	S				60	11,310
23	LO					60	11,310
25	I					20	1,257
26	I					20	1,257
27	I		P			75	17,671
28	I	IF	S			60	11,310
29	A	LO				60	11,310
30	C					175	96,211
31	A	I				55	9,503
32	I	I				20	1,257
33	I	I		P		75	17,671
34	I	I	IF	S		60	11,310
35	I	A	LO			60	11,310
36		C				175	96,211
37	LO	A	I			60	11,310
38**	IF	I	I			0	0
39		I	I		P	75	17,671
40		I	I	IF	S	60	11,310
41		I	A	LO		60	11,310
42			C			175	96,211
43		LO	A	I		60	11,310
44	S	IF	I	I		60	11,310
45	P		I	I		75	17,671

maintained between these stations and other stations operating on various channels. Table 3-1 shows the denied channels, the reasons for denial, the distance separation required and the area corresponding to the distance separation. In some cases a channel is denied for several reasons. For these cases the largest distance separation is used since it encompasses the maximum denial due to the various reasons. In this manner the area denied for a specific channel is only considered once (at maximum area for any other interference conditions) when overlap of denial areas occurs. Note that a denial area for Channel 38 is not included since this channel is now used for radio astronomy and no TV transmitter or receiver emissions are present in this channel from the existing station.

Assuming a reference system with a 10 dB front-to-back receiving antenna gain at fringe areas, no other than cochannel restrictions and a 1,000 transmitting antenna height; cochannel separation distance would be approximately 100 miles which is an area of 31,416 square miles denied. Then

$$\text{Band Eff.} = \frac{6 \times T \times 31{,}416 \times 5}{6 \times T \times 911{,}770} = .172$$

The band efficiency is somewhat greater than the efficiency of a single station as shown earlier. This is due to the overlap of certain denial areas as mentioned earlier.

To illustrate the effect of common denial areas for LMR, consider the following example. For the purpose of this example assume three VHF LMR colocated stations, A, B and C, and two colocated stations D and E, at a distance of 35 miles from the three stations. The frequencies of the three colocated stations are assumed to be A = f, B = f + 30 kHz and C = f + 60 kHz. The frequencies of the two allocated stations at 35 miles distance are

SECTION III

BAND EFFICIENCY

3.1 GENERAL

When a number of systems operate within a band in a specific geographic area, the area denied by one system may overlap the area denied by another system. These common denial areas will increase the efficiency of the band use over that which would be determined from considering the area denied by individual systems.

For instance, when a number of UHF-TV channels are operating in a given market, the denied area for a taboo channel resulting from one operating station, may overlap a denied area caused by another operating station. Also, for operations involving high and low channels certain taboos are not in the UHF-TV band. Because of these factors, the efficiency of the band would be higher than for a single operating channel. The introduction of low-power stations (LPTV) at UHF would also tend to increase the efficency of band use since the taboos are smaller for these stations and they would "fill in" some areas in which high-power stations are precluded. The present use of LMR systems in the UHF-TV band on Channels 14 to 20 in some geographic areas increases the efficiency of band usage for similar reasons. Decreases in efficiency can occur if larger-than-taboo distances are used in an area.

In similar manner, the band efficiency in the LMR VHF high band would also differ from that of a single system because of the common denial areas, locations of stations, powers and antenna heights involved.

To illustrate the effect of common denial areas for broadcasting consider the following example. For the purpose of this example assume that UHF Channels, 30, 36, 42, 48 and 54 have co-located antennas in a city. Based on part 73.610 of the FCC rules, certain distance separations must be

TABLE 3-1
Continued
DENIAL DUE TO
CHANNELS 30, 36, 42, 48 & 54 ON SAME TOWER

CHANNEL DENIED	REASON FOR DENIAL — Type of Interference With Channel:*					MAX DIST DENIED (Miles)	AREA DENIED (Sq. Miles)
	30	36	42	48	54		
46			I	I	IF	20	1,257
47			I	A	LO	60	11,310
48				C		175	96,211
49			LO	A	I	60	11,310
50		S	IF	I	I	60	11,310
51		P		I	I	75	17,671
52				I	I	20	1,257
53				I	A	55	9,503
54					CO	175	96,211
55				LO	A	60	11,310
56			S	IF	I	60	11,310
57			P		I	75	17,671
58					I	20	1,257
59					I	20	1,257
61					LO	60	11,310
62				S	IF	60	11,310
63				P		75	17,671
68					P	75	17,671
69					S	60	11,310
							911,770 TOTAL

* C = Cochannel, A = Adjacent Channel I = Intermodulation
IF = IF Beat, LO = Local Oscillator, P = Picture Image & S = Sound Image.

** Channel 38 is Denied Because of Radio Astronomy.

D = f + 15 kHz and E = f + 45 kHz. The coordination requirements of Part 90 of the FCC Rules and Regulations (75 miles cochannel and 35 miles for 15 kHz adjacent channels) are satisfied by this arrangement.

The two center adjacent channels at the three colocated stations (f + 15 kHz and f = 45 kHz) are denied for a radius of 35 miles by each of two stations (A and B have a common adjacent channel denial area for f + 15 kHz, while B and C have a common denial area for f + 45 kHz). Also D and E have a common adjacent channel denial area at f + 30 kHz. Further, the cochannel denial area for D completely encompasses the adjacent channel denial area of A and B. A similar situation exists for E with regard to B and C and for B, with regard to D and E. The cochannel denial for A encompasses the lower adjacent channel denial area of D, while the cochannel denial area of C completely encompasses the upper adjacent channel denial area of E.

As a result of these common denial areas the only excess spectrum denied is that due to the lower adjacent channel of A (f - 15 kHz) and the upper adjacent channel of C (f + 75 kHz). As indicated in the LMR example in Section II, the cochannel denial area is 17,671 square miles for each channel, while the adjacent channel denial area is 3,848 square miles for each adjacent channel.

In this specific example of LMR band efficiency there are five cochannel denial areas and only two adjacent channel denial areas. Thus the band efficiency would be:

$$\text{Band Eff.} = \frac{15 \times T \times 5 \times 17{,}671}{15 \times T \times (5 \times 17{,}671 + 2 \times 3848)} = .920$$

The band efficiency for LMR systems is therefore, significantly increased over that of a single system due to common denial areas.

3.2 COMPUTATION OF DENIED AREAS

In the previously discussed examples, omni directional antennas were used and when common denial areas were involved the denial area of one system encompassed that of another system. In computation of band efficiency such situation will not always occur. Common and irregular denial areas in such general situations can occur frequently, since a large number of systems and considerable possiblities of having overlapping denial areas will exist. Since the denial area for a band would be computed for each frequency increment for both existing and reference systems, the computation can be quite lengthy.

The use of a matrix representation of areas is recommended to simplify the computational process. This would involve subdividing the area under consideration into square sub-areas of sufficiently small size to provide for reasonable approximation to denial area. In the case of omni directional systems in order to simplify computations, a square of area equal to the circular area could be used as an approximation as shown in Figure 3-1. Similarly, Figure 3-2 shows the two-level antenna pattern approximation for a directional antenna. A "1" in each of the small squares indicates denial to another system.

In order to determine the denial area for a particular frequency increment (or channel), first determine the denial matrix with the system placed at the center of the area. Then move the center of the matrix to the coordinates at which that system is located. Figure 3-3 shows this process for a system located at coordinates (m, n). The relative locations of each matrix element are then changed by adding (m, n) to the element locations of the matrix at the center of the area.

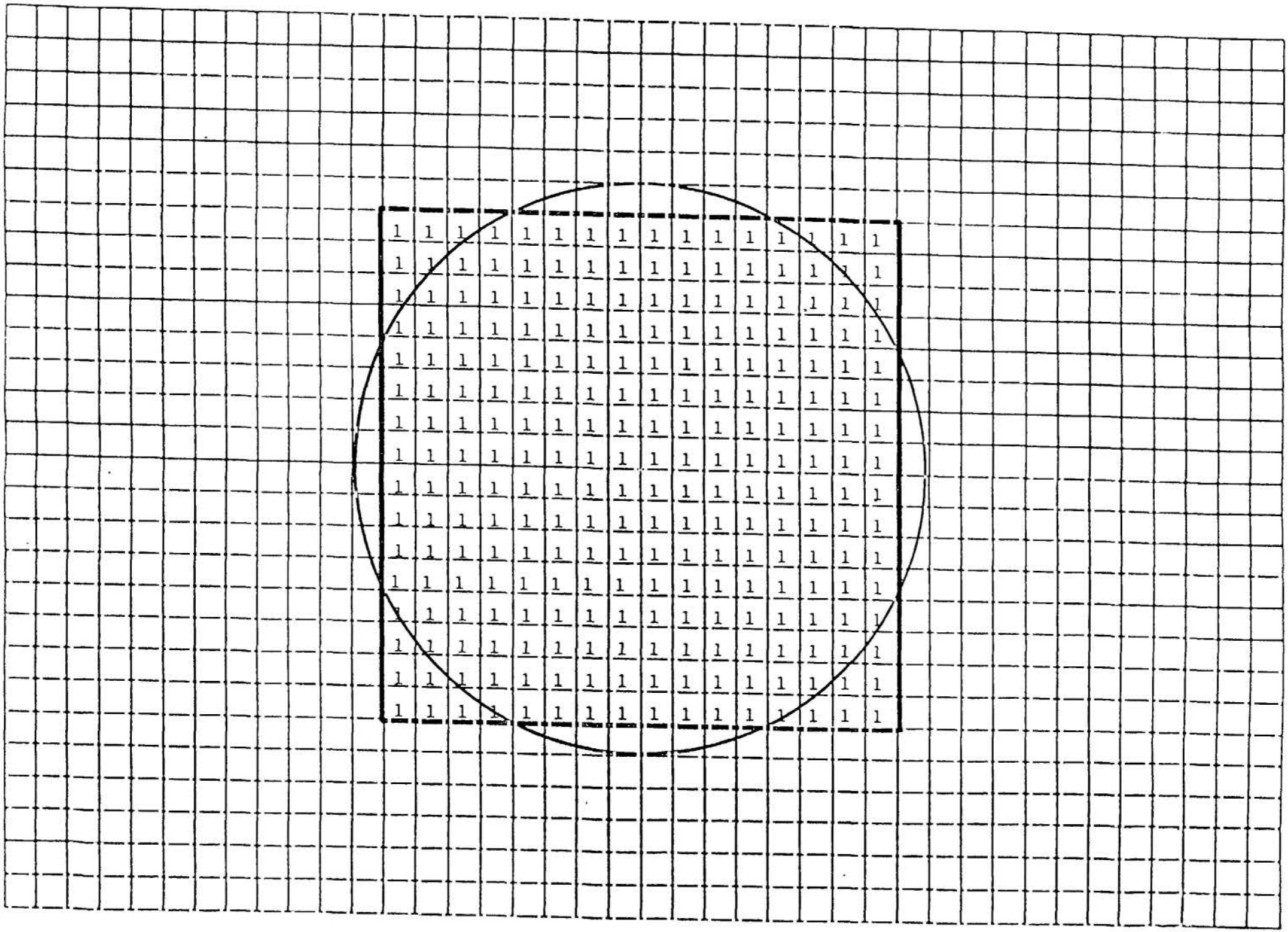

FIGURE 3-1 SQUARE APPROXIMATION TO OMNI DIRECTIONAL DENTAL AREA

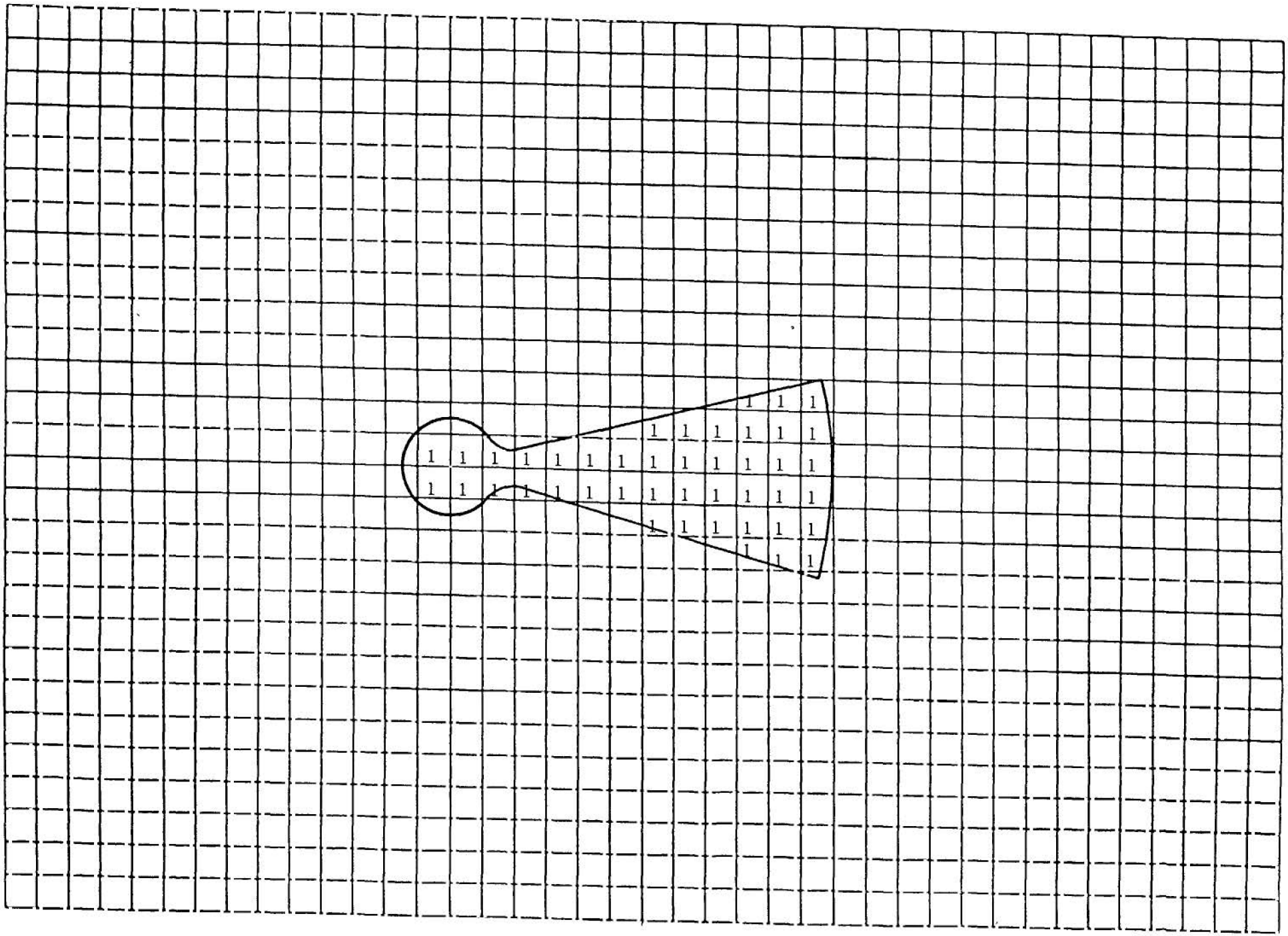

FIGURE 3-2 TWO-LEVEL DIRECTIONAL ANTENNA APPROXIMATION

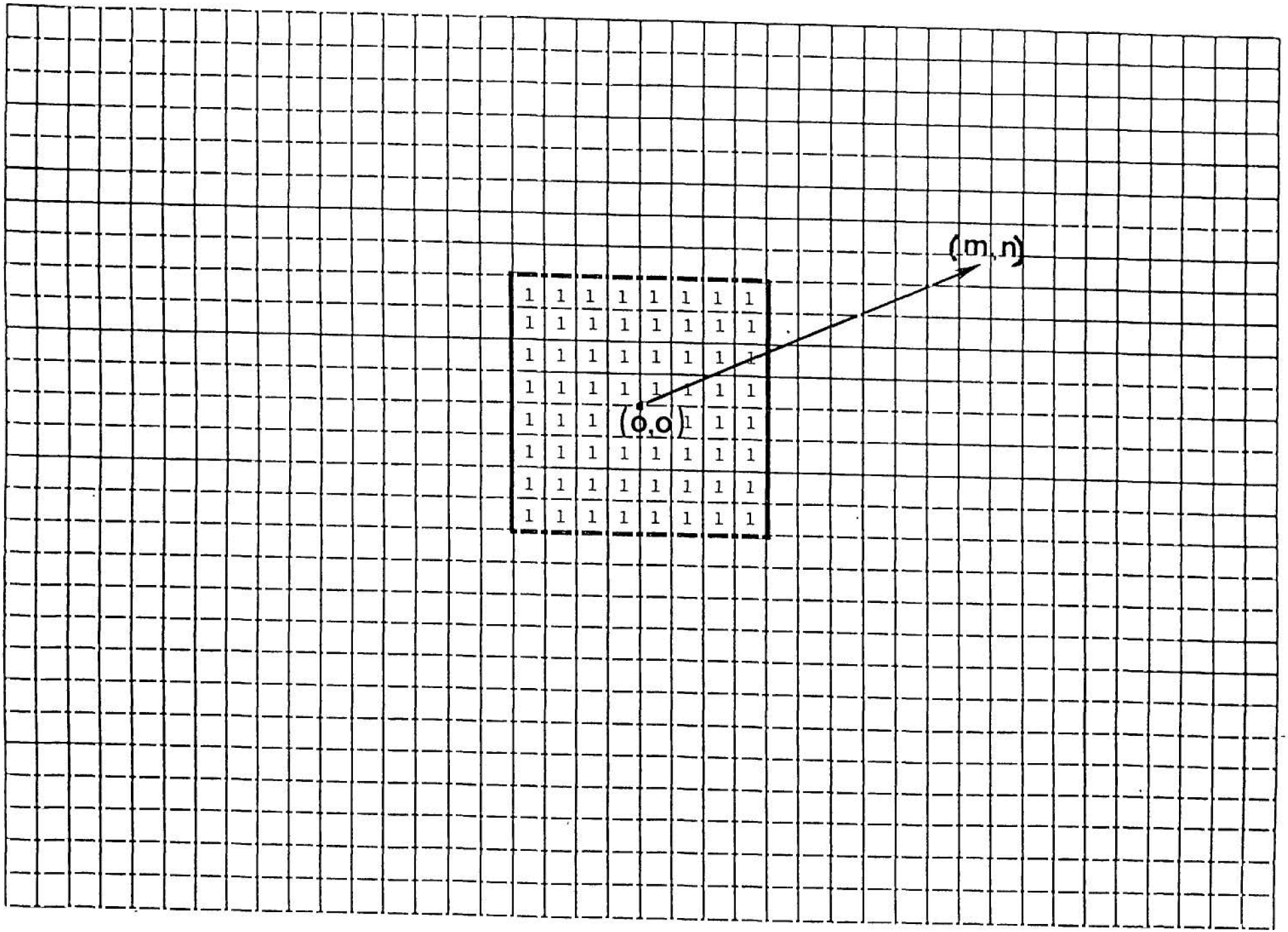

FIGURE 3-3 DENIAL MATRIX FOR A SYSTEM AT (m, n)

This step is repeated for each system that can produce area denial for the frequency increment under consideration and the numbers appearing in each element are added.

Figure 3-4 shows the results of this process for three omni directional systems, while Figure 3-5 depicts the denial area for two directional systems. The numbers in the elements indicated the number of systems causing denial to the element. To determine the denied area the number of elements with a value of "1" or greater are added and multiplied by the area of the element. For example, in Figure 3-4 there are 216 elements which are denied. If each element represents one square mile that total area denied would be 216 square miles. Similarly in Figure 3-5, 82 square miles are denied.

After determining the area denied for each frequency increment the results are added to produce the total denial in term of bandwidth - area product, or:

$$\text{Total Systems Denial} = D_s = \sum_{i=1}^{n} \Delta f_i \, S_{si} \qquad (3\text{-}1)$$

If Δf respresents a uniform increment then:

$$D_s = \sum_{i=1}^{n} \Delta f \cdot \sum_{i=1}^{n} S_{si} \qquad (3\text{-}2)$$

$$D_s = B_T \cdot \sum_{i=1}^{n} S_{si} \qquad (3\text{-}3)$$

where B_T is the width of the total band under consideration.

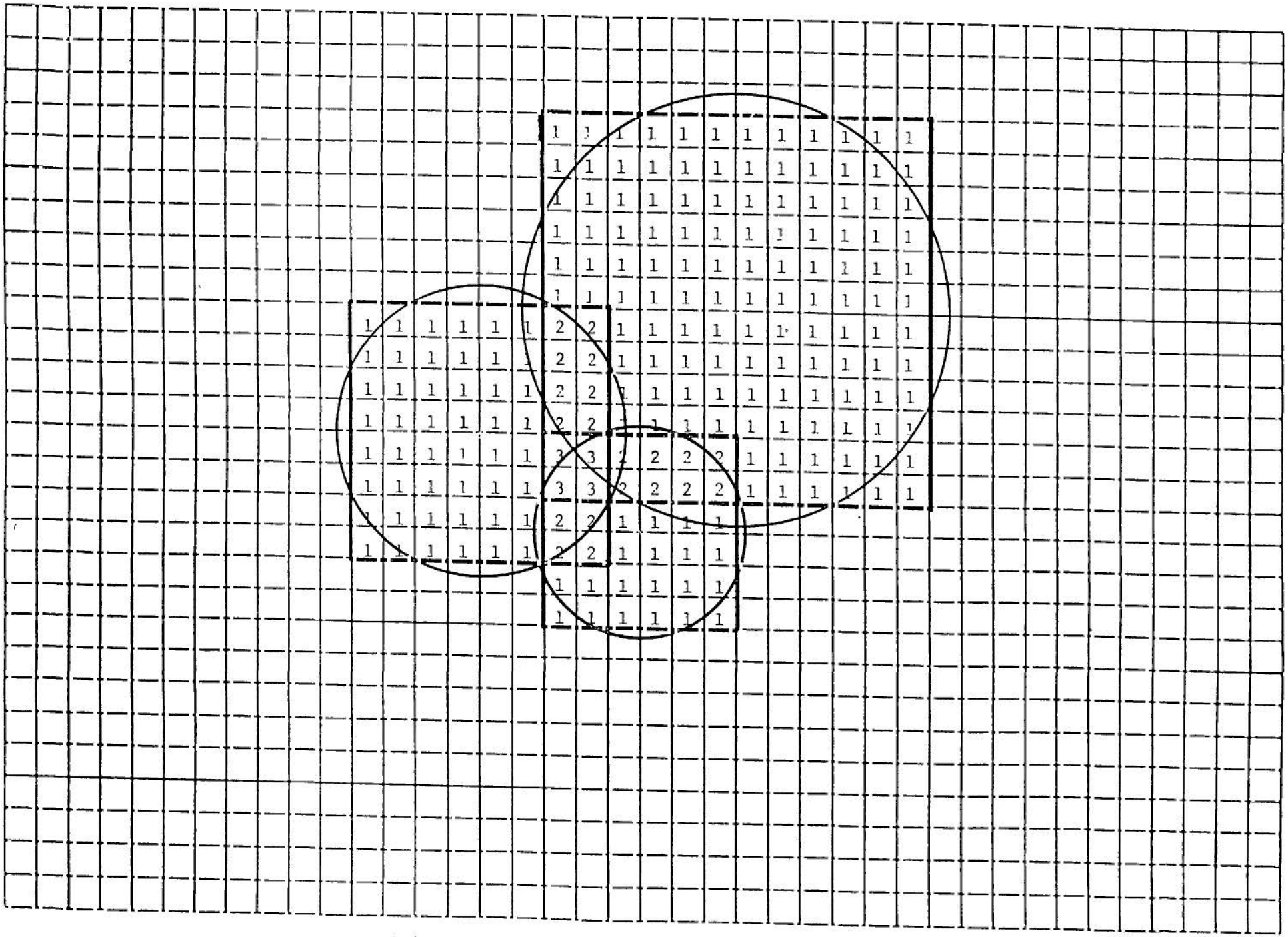

FIGURE 3-4 DENIAL AREA FOR THREE OMNI DIRECTIONAL SYSTEM

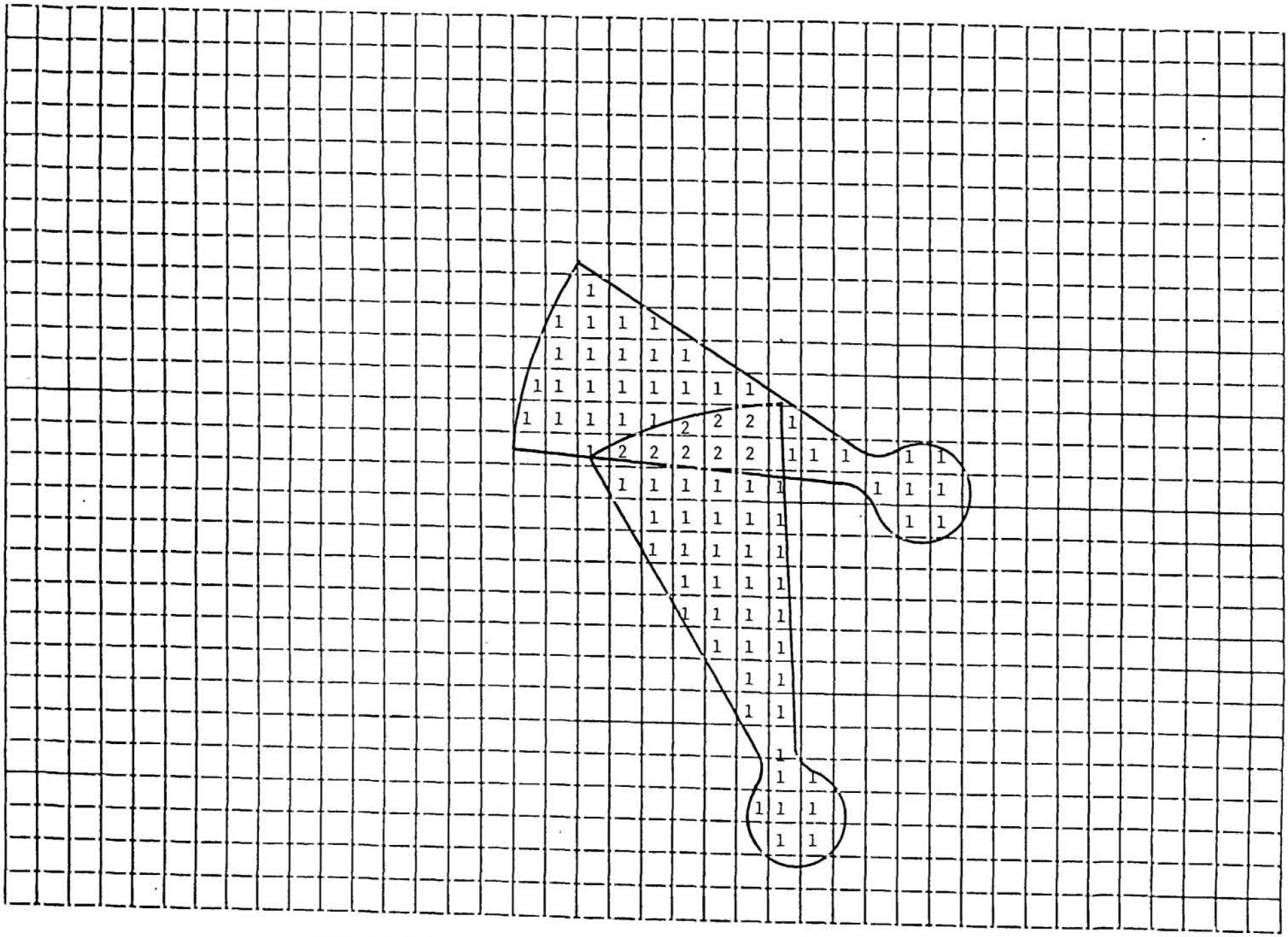

FIGURE 3-5 DENIAL AREA FOR TWO DIRECTIONAL SYSTEM

The entire process is then repeated with reference systems substituted for the actual systems at each location for each frequency increment. The results of this are:

$$\text{Total Reference Denial} = D_r = B_r \sum_{i=1}^{n} S_{ri} \qquad (3\text{-}4)$$

The Band efficiency is then determined by dividing D_r by D_s or:

$$\text{Band Eff.} = \frac{D_r}{D_s} = \frac{\sum_{i=1}^{n} S_{ri}}{\sum_{i=1}^{n} S_{si}} \qquad (3\text{-}5)$$

3.3 TIME DENIAL

The previous discussions have considered that all systems operate at all times. This may not be the case for practical operational systems. The usage time can be factored into the previously discussed calculations. However, it is important to note that the time factor may not be represented by time that the transmitter is emitting energy or by the time a desired signal is detected by a receiver.

For example, an emergency communication system may have on-going transmissions for only a small portion of the time, but someone may be listening at all times. Under such conditions the system can be considered to be used at all times. A radio astronomy system does not transmit, but its receiver may be on at all times. In certain situations, such as land mobile radio, a system is designed to account for peak traffic in a "busy hour" and, if fully loaded during the "busy hour", cannot share with other systems. Sharing may be possible at times other than the busy hour. These factors must, therefore, be considered in determining the time factor and they will differ from system to system.

Where systems are not considered to be in operation at all times a time factor can be associated with the denial area at a specific frequency increment. For example, if a non-emergency LMR system has a maximum saturation loading of 100 mobile units and is only using 40 units, the time factor would be 0.4. Under such conditions time sharing with another system is possible.

To account for this in the previously discussed matrix addition process, each matrix element for each frequency increment would be assigned a time factor of denial rather than complete denial. For example, if a system is being used 40% of the time a factor of 0.4, instead of "1" would be assigned for the cochannel denial matrix elements and for adjacent channel matrix elements associated with that system. Another system on an adjacent frequency might have a time factor of 0.3. In common denial areas the matrix elements would be assigned a value of 0.3 + 0.4 = 0.7 instead of "1".

In determining the denial for a given frequency increment, the values in the elements and it would then be totaled, with values less than "1" kept and values greater than "1" being assigned as "1" (fully loaded). To illustrate, if each of the systems shown in Figure 3-5 had a time factor of 0.6, the elements with "1" values would be replaced by elements of value 0.6 and the "2" values replaced by "1". The total area-time product would then be 52.4, rather than 82 that would occur if each system was on at all times.

The procedure for determining band efficiency would then be the same as previously discussed except that the time factor values would be used.

3.4 CONSIDERATION OF MIXED SERVICES IN A BAND

A number of bands are allocated to more than one Primary Radio Service as well as allowing for other secondary and permitted Radio Services. In such cases, the frequency distance separations for interservice operations

can be different than those for intraservice operation. The denial areas will, therefore, be different. As a consequence, the band efficiency will depend on which Radio Service the "new" system being added to the environment represents.

As an illustrative example, assume that a particular band is allocated on a primary basis to both the Mobile and Broadcasting Radio Services. As indicated previously, the cochannel transmitter separation for UHF TV Broadcasting is 175 miles and for LMR is 75 miles. Assume, for the purpose of this example, that the transmitter separations between Broadcast and LMR transmitters is 100 miles. In the area of concern only Broadcasting is presently used. It is clear that the area denied by existing systems will be different if one considers the denial to LMR systems than it would be if they considered the denial to Broadcast systems.

Thus, the band efficiency, when mixed services are involved, must be specified in terms of the service which is being introduced. It should be noted that the results of band efficiency studies, when comparing the introduction of various services in a mixed band, can provide very useful information for spectrum planning purposes concerning future flexibility of the band being investigated.

The matrix addition procedure for determining band efficiency is readily adaptable to a mixed service situation. With the exception of specifying the type of service being introduced the procedure would be exactly the same for mixed service bands as it would for single-service bands.

3.5 A DEFINITION OF BAND EFFICIENCY FACTOR

Based on the above discussions a general definition of a Band Efficiency Factor can be developed. Consider that a number of existing systems tuned to various frequencies, at various locations, with varying time

occupancy and representing various types of Radio Services can exist in a band for a defined geographic area. Each existing system uses a certain bandwidth x spatial volume x time to the placement of a new system. The Band Efficiency Factor (BEF) would be:

$$BEF = \frac{\text{(spectrum resource used by all reference systems)}}{\text{(spectrum resource used by all existing systems)}} = \frac{SRU_r}{SRU_s} \qquad (3\text{-}6)$$

or:

$$BEF = \frac{\Sigma\, B_{ri}\, S_{ri}\, T_{ri}}{\Sigma\, B_{si}\, S_{si}\, T_{si}} \qquad (3\text{-}7)$$

where the summation in the denominator covers all existing systems and the summation in the numerator covers all reference systems used to replace existing systems.

Since two or more systems may have overlapping denial of spectrum resource to a new system, it is necessary to subdivide the spectrum into bandwidth x physical space x time increments. The "kth" increment of spectrum resource used would be:

$$SRU_k = \Delta f_k \cdot \Delta S_k \cdot \Delta t_k \qquad (3\text{-}8)$$

The spectrum resources used by all system would be:

$$SRU = \Sigma\, SRU_k = \Sigma\, \Delta f_k \cdot \Delta S_k \cdot \Delta t_k \qquad (3\text{-}9)$$

where the summation is taken over the total number of increments.

If the total width of the band being examined is B_T and the frequency increment Δf is uniform and equal to or less than the channel width of the system with the smallest channel width, then:

$$B_T = \sum_{i=1}^{m} \Delta f_{ki} \tag{3-10}$$

where m is the total number of frequency increments used.

Equation (3-9) then becomes

$$SRU = B_T \sum_{j=1}^{n} \Delta S_j \, \Delta t_j \tag{3-11}$$

where n equals the total number of spatial x time increments used.

As discussed previously, the physical space, geographic area (or volume) can be subdivided in sub-areas (or sub-volumes). Each of these would have an associated time factor obtained by adding the time factors for each system denying use of the sub-area (or sub-volume). Values of "1" or less would be directly used, while values greater than "1" (complete denial) would be replaced by "1". For each frequency increment the bandwidth x physical space x time product would then be:

$$SRU_i = \Delta f_i \sum_{j=1}^{p} \Delta S_{ji} \, \Delta t_{ji} \tag{3-12}$$

where p equals the total number of sub-areas (or sub-volumes) in the area (or volume) being considered.

The total spectrum resourse used would be found by:

$$SRU = \sum_{i=1}^{mp} SRU_i = \sum_{i=1}^{m} \Delta fi \sum_{j=1}^{p} \Delta S_{ji} \, \Delta t_{ji} \tag{3-13}$$

Substitution equation (3-10) in (3-13) results in:

$$SRU = B \sum_{i=1}^{m} \sum_{j=1}^{p} \Delta S_{ji} \, \Delta t_{ji} \tag{3-14}$$

Substituting equation (3-14) in equation (3-6) for the reference systems and for the existing systems respectively results in:

$$BEF = \frac{\sum_{i=1}^{m} \sum_{j=1}^{p} \Delta S_{jir} \, \Delta t_{jir}}{\sum_{i=1}^{n} \sum_{j=1}^{p} \Delta S_{jis} \, \Delta t_{jis}} \tag{3-15}$$

where m is the total number of frequency increments used and p is the total number of sub-areas (or sub-volumes).

Equation (3-15) provides a general method of determining the Band Efficiency Factor (BEF) for mixed Radio Services and for systems with varying time occupancy.

As noted previously, the BEF in a mixed Radio Service band depends on the Radio Service being introduced in the band. This can provide a very useful planning technique since it aids in determining future flexibility for use of a band by various Radio Services.

The matrix addition method discussed previously is well suited to computer solution of Equation (3-15). For terestrial systems, where only the area is of interest, a two-dimensional matrix would be used. In other systems, where physical volume is of interest, a three dimensional matrix would be used. In the case of the grostationary orbit the calculation reduces to a one dimensional matrix; the orbital spacing.