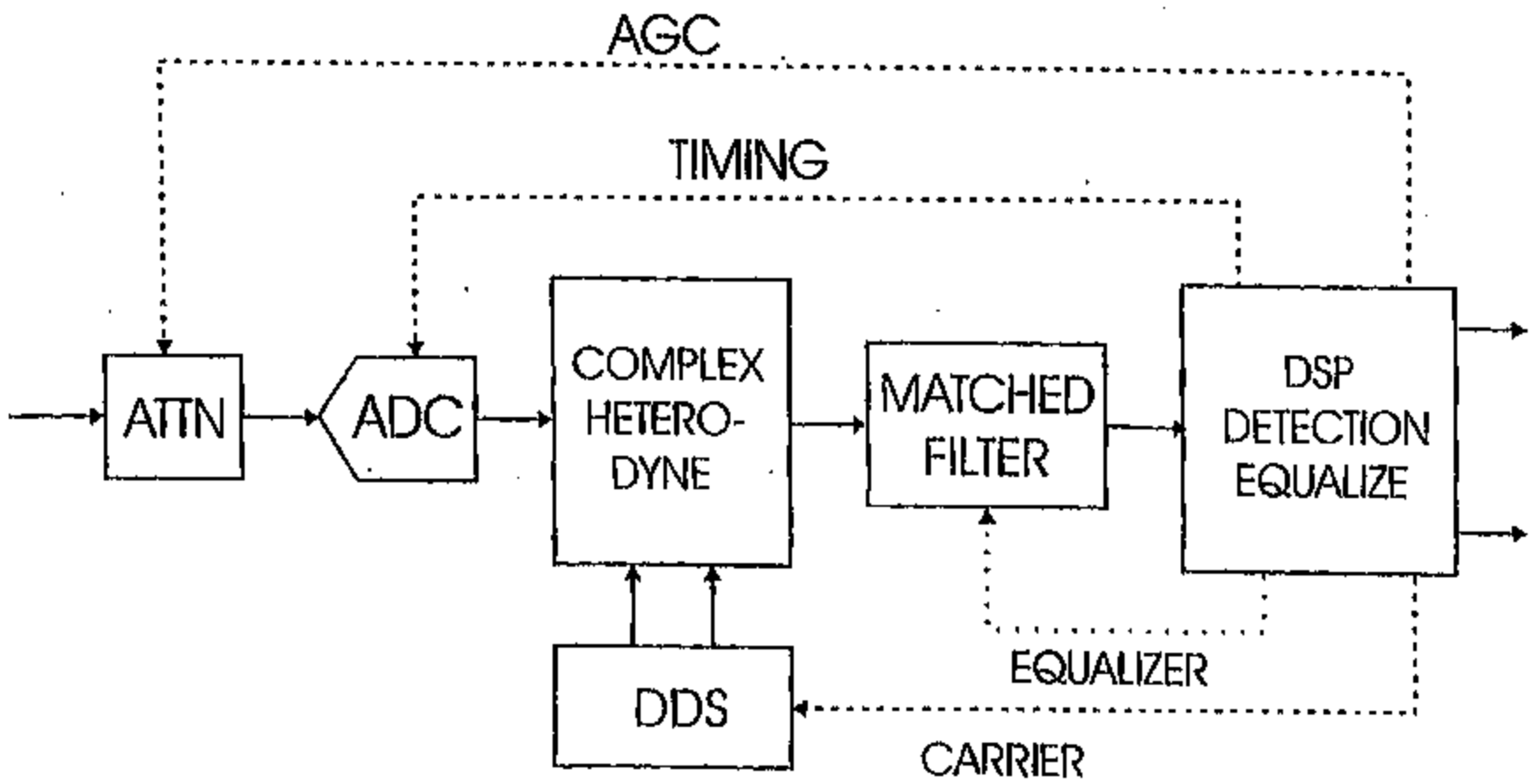

SIGNAL AND CONTROL PATHS FOR DSP BASED RECEIVER

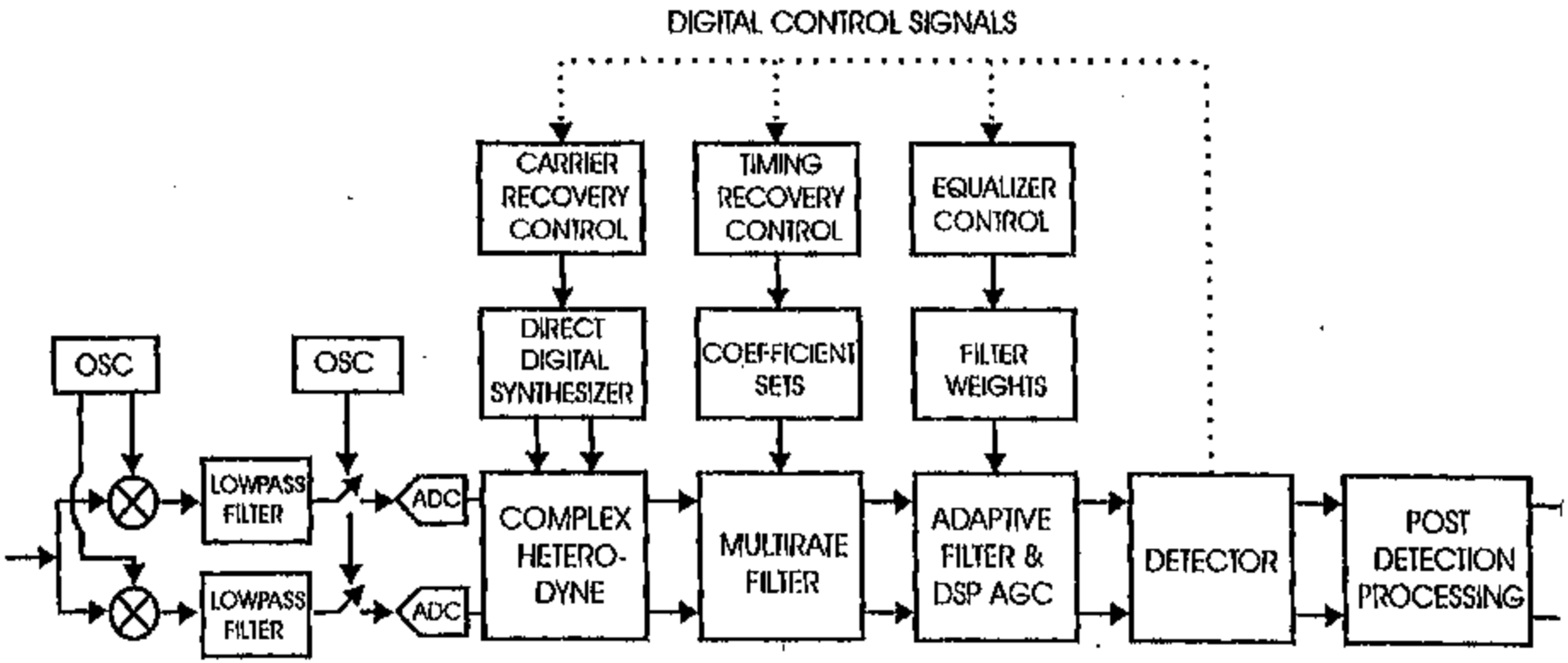

DSP BASED SIGNAL CONDITIONING FUNCTIONS

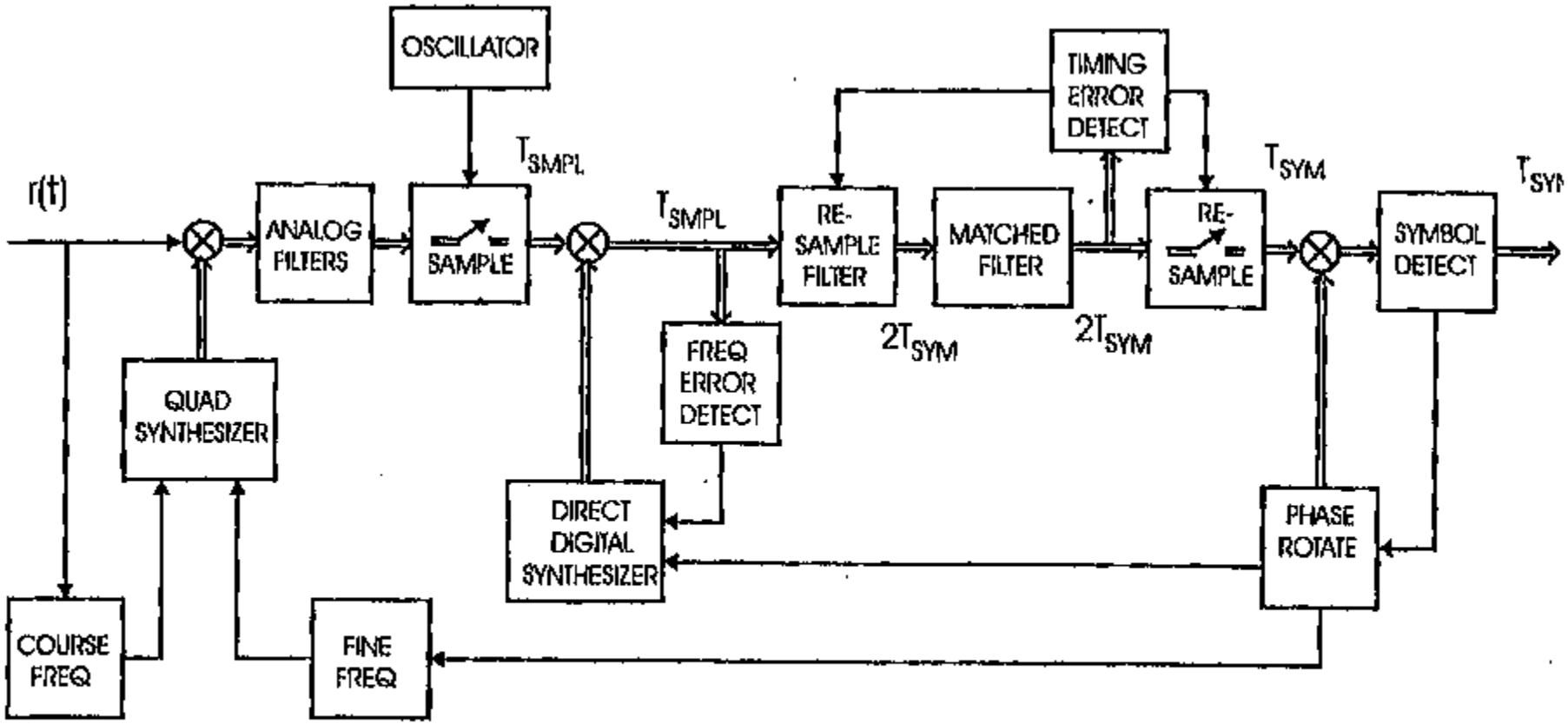

BLOCK DIAGRAM OF QAM RECEIVER

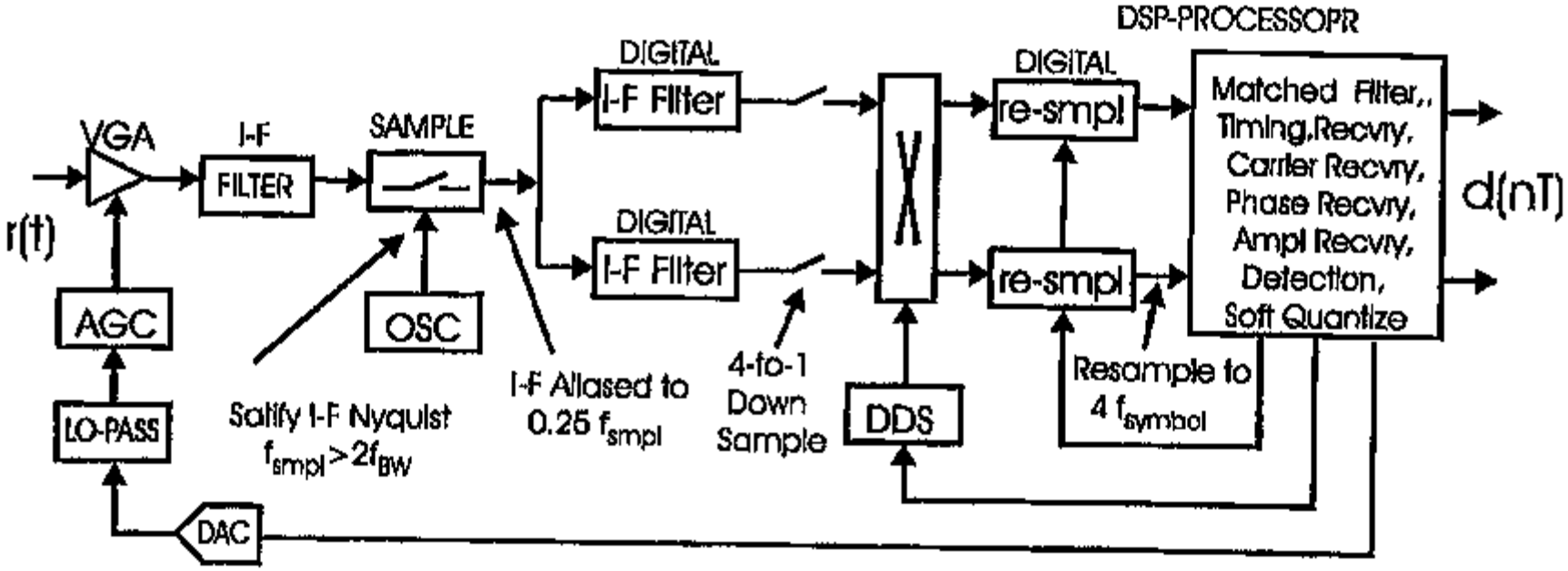

FIGURE 4. Narrow-band I-F Sampling, Timing and Carrier in DSP

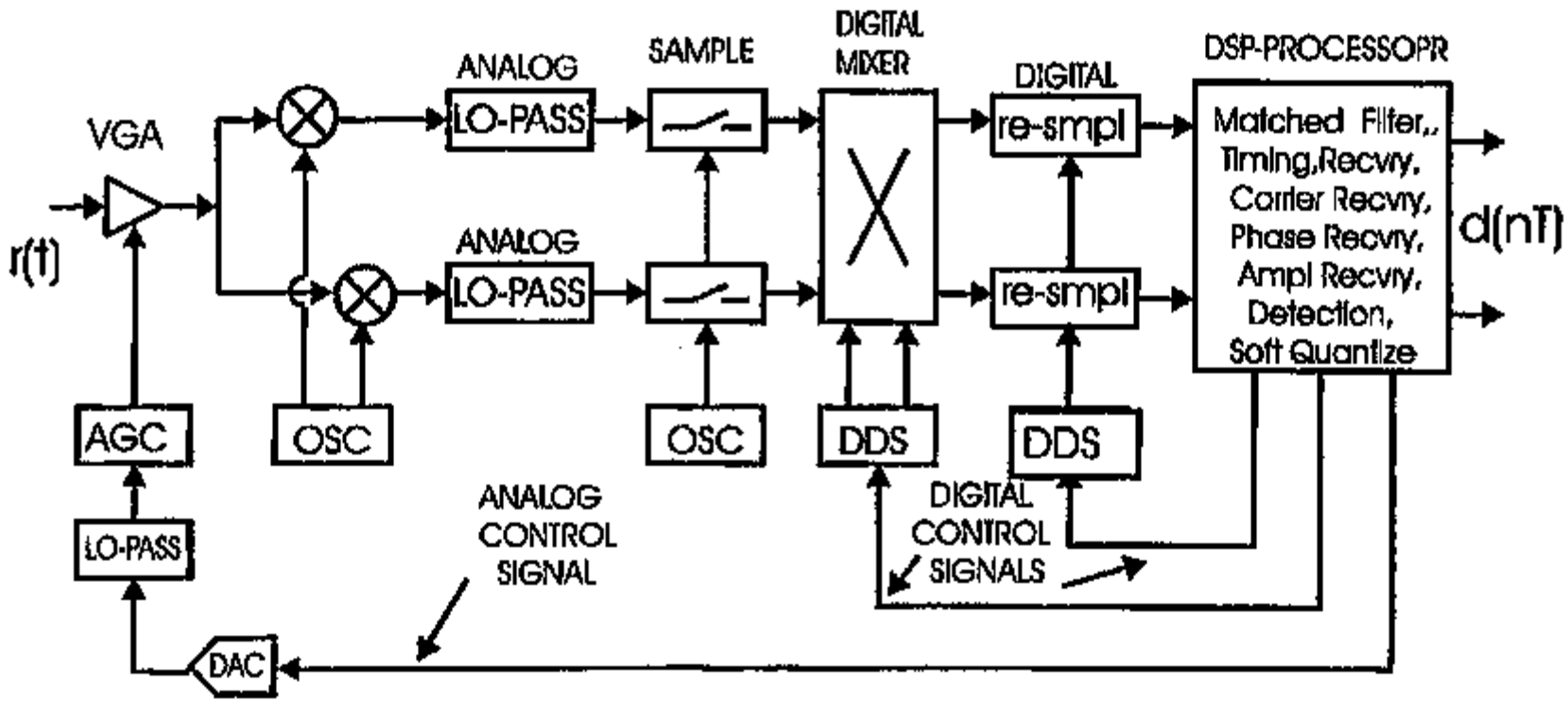

FIGURE 3. Asynchronous Carrier and Clock, PPL's in DSP Receiver

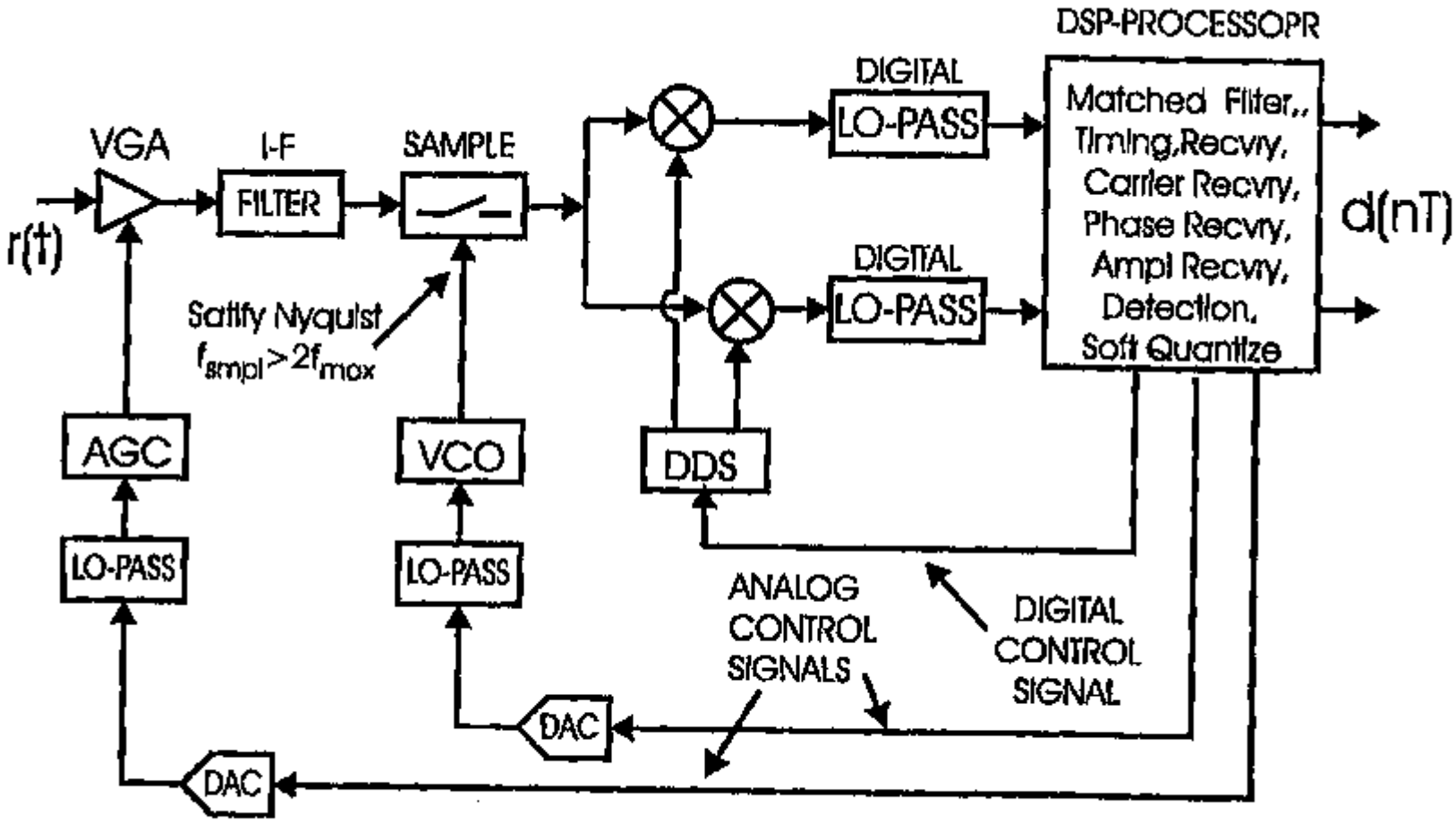

FIGURE 2. Broadband DSP Copy of Conventional Analog Receiver

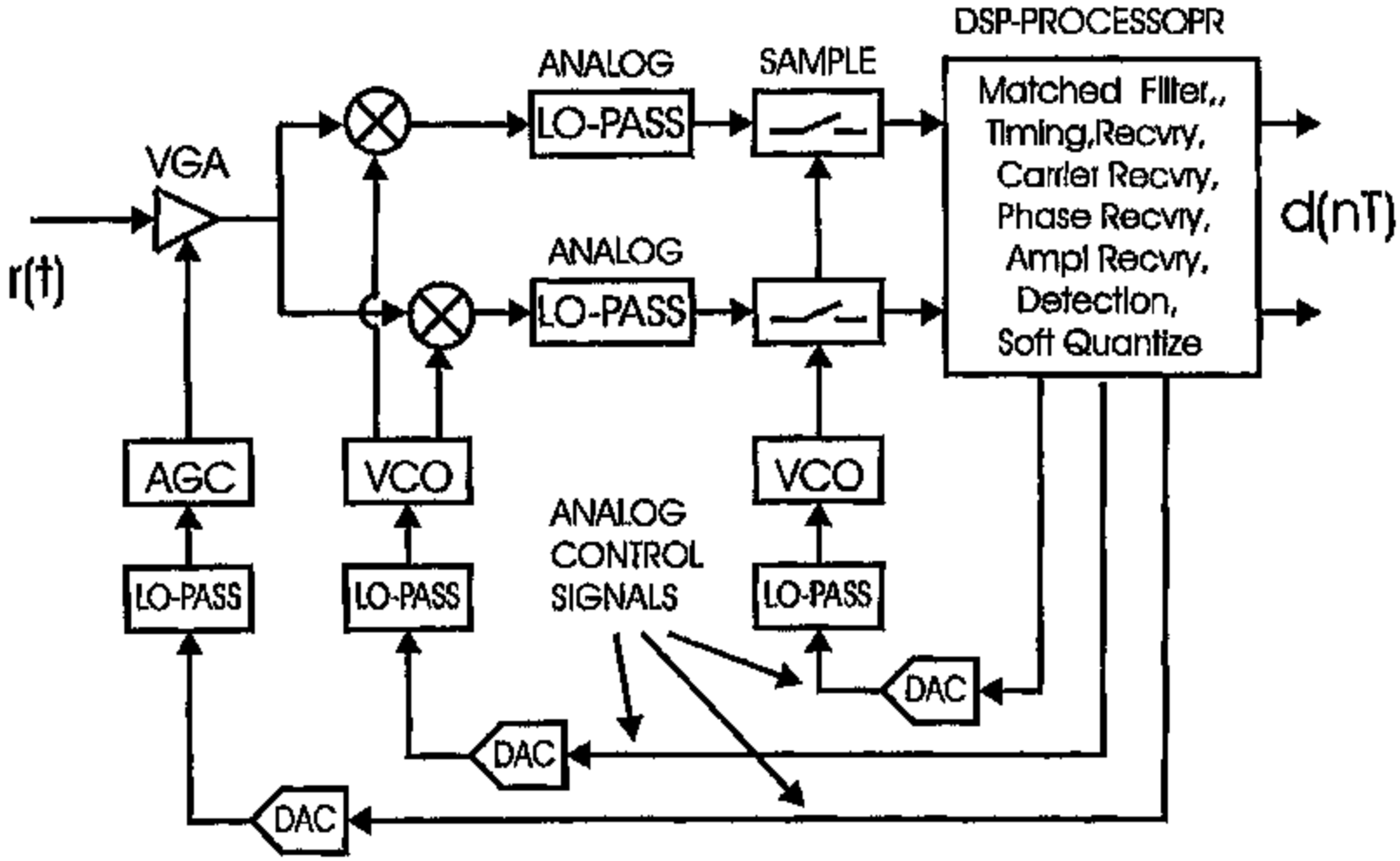

FIGURE 1. Conventional DSP Based Receiver

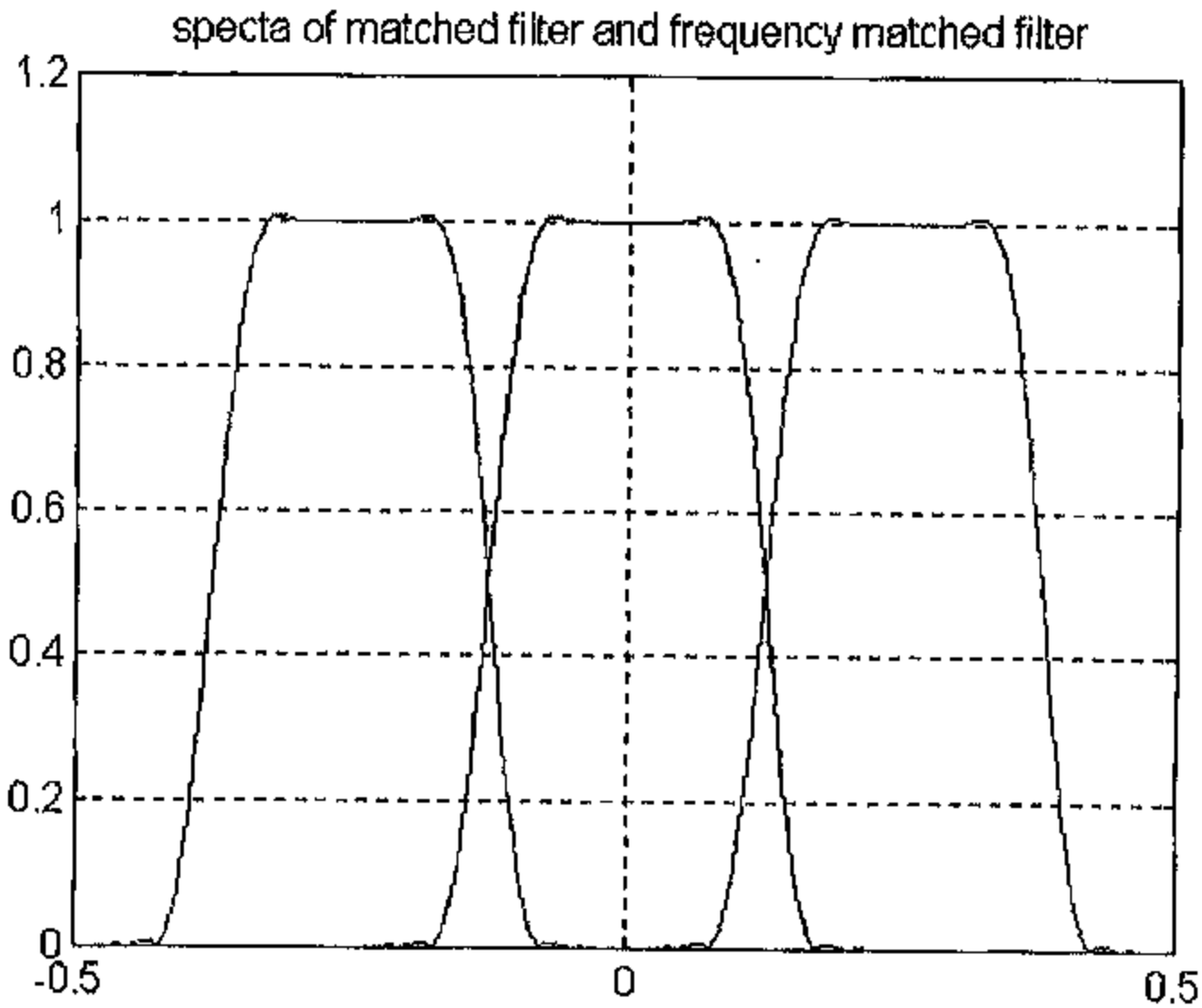
specta of matched filter and frequency matched filter
1.2
1
0.8
0.6
0.4
0.2
0
-0.5
0
0.5

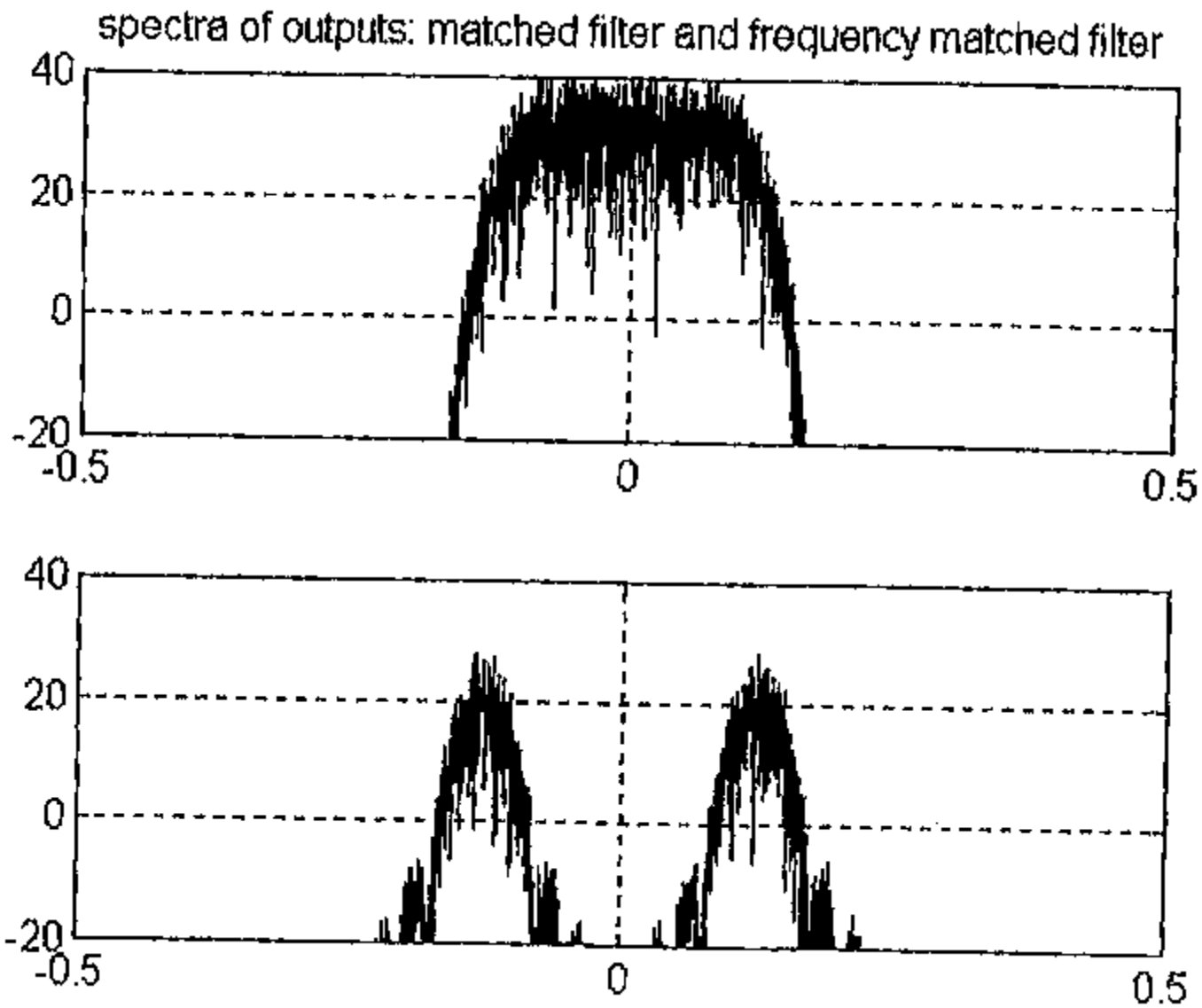
spectra of outputs: matched filter and frequency matched filter
40
20
0
-20
-0.5
0
0.5
40
20
0
-20
-0.5
0
0.5

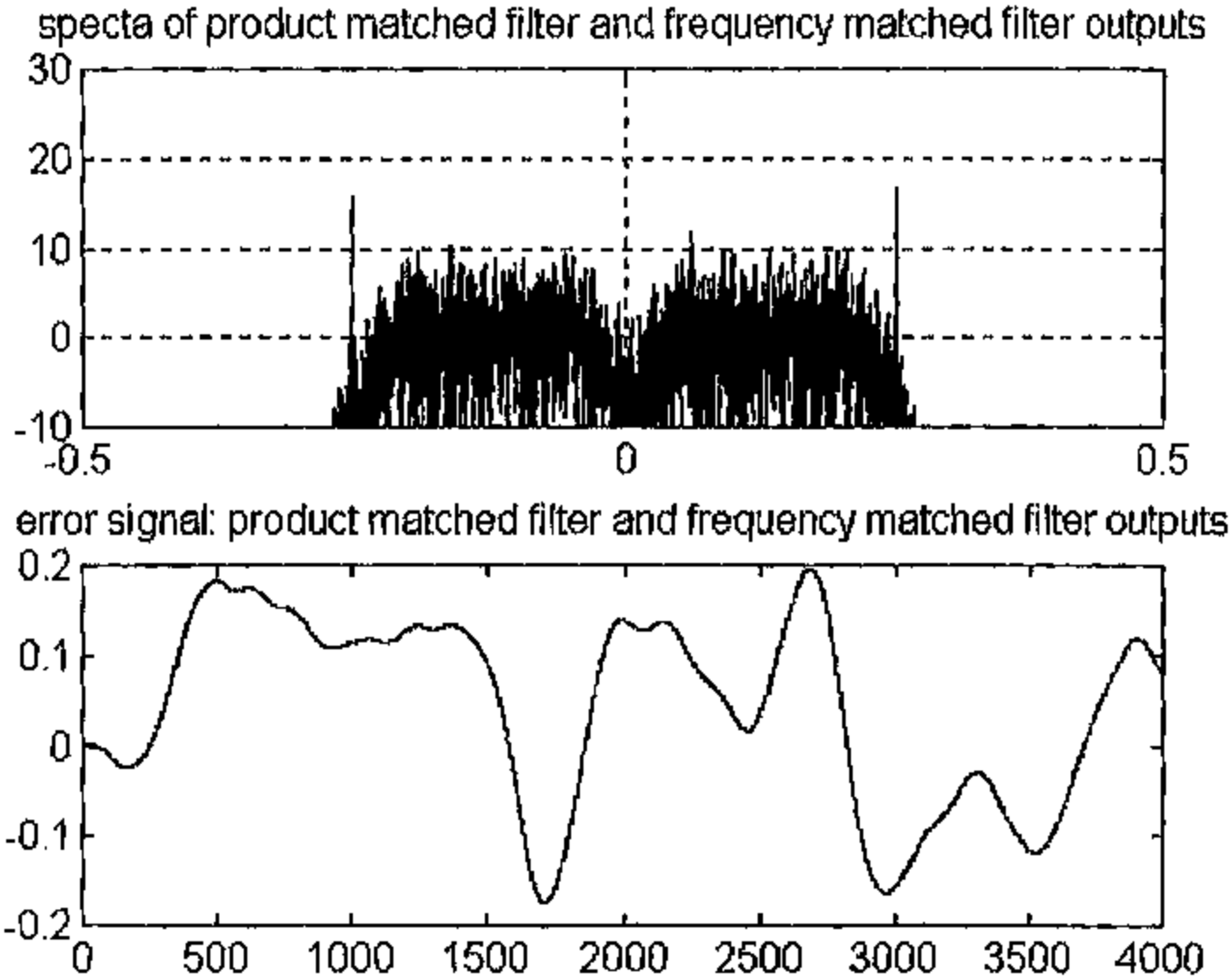
specta of product matched filter and frequency matched filter outputs
30
20
10
0
-10
-0.5
0
0.5
error signal: product matched filter and frequency matched filter outputs
0.2
0.1
0
-0.1
-0.2
0
500
1000
1500
2000
2500
3000
3500
4000

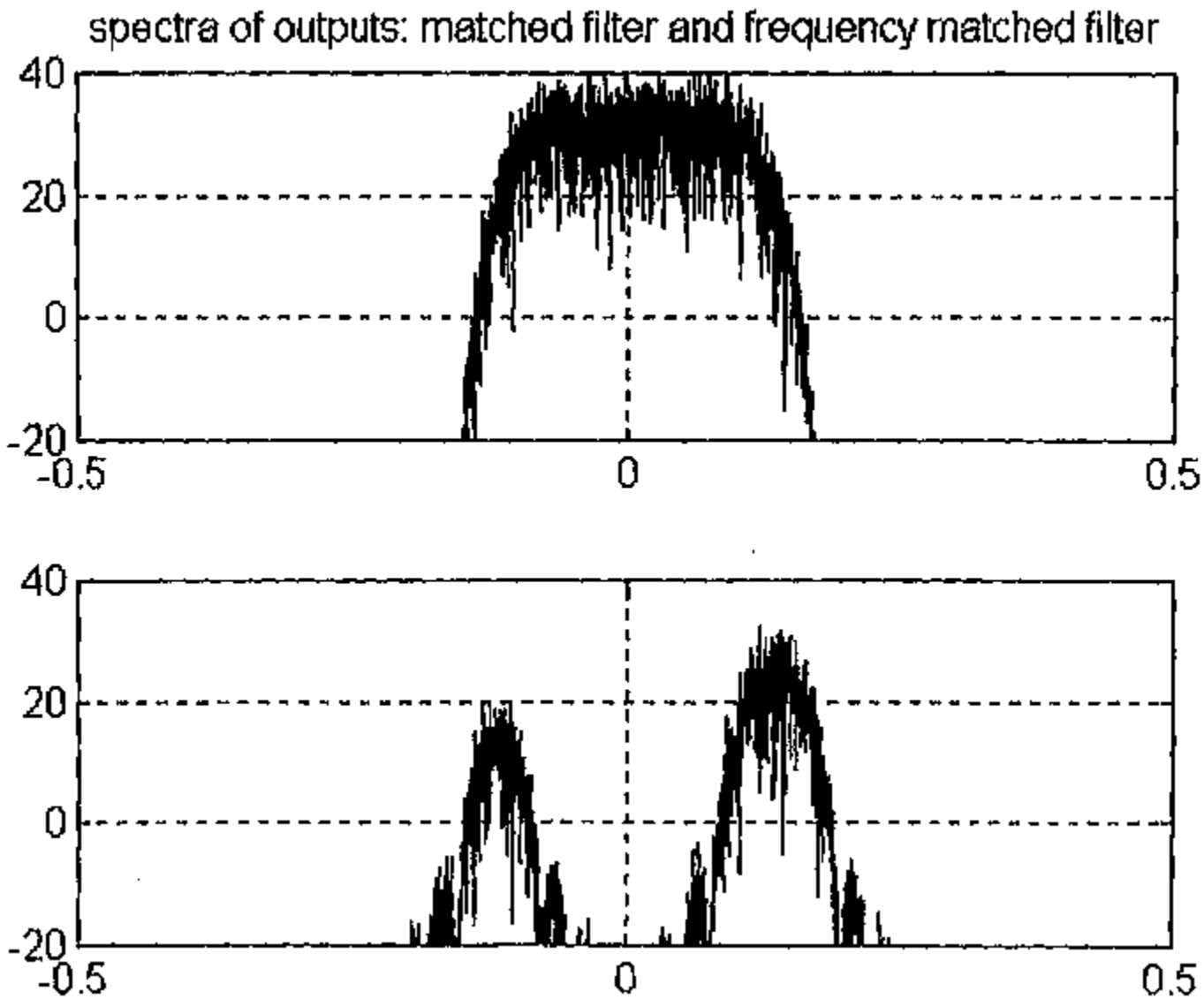
spectra of outputs: matched filter and frequency matched filter
40
20
0
-20
-0.5
0
0.5
40
20
0
-20
-0.5
0
0.5

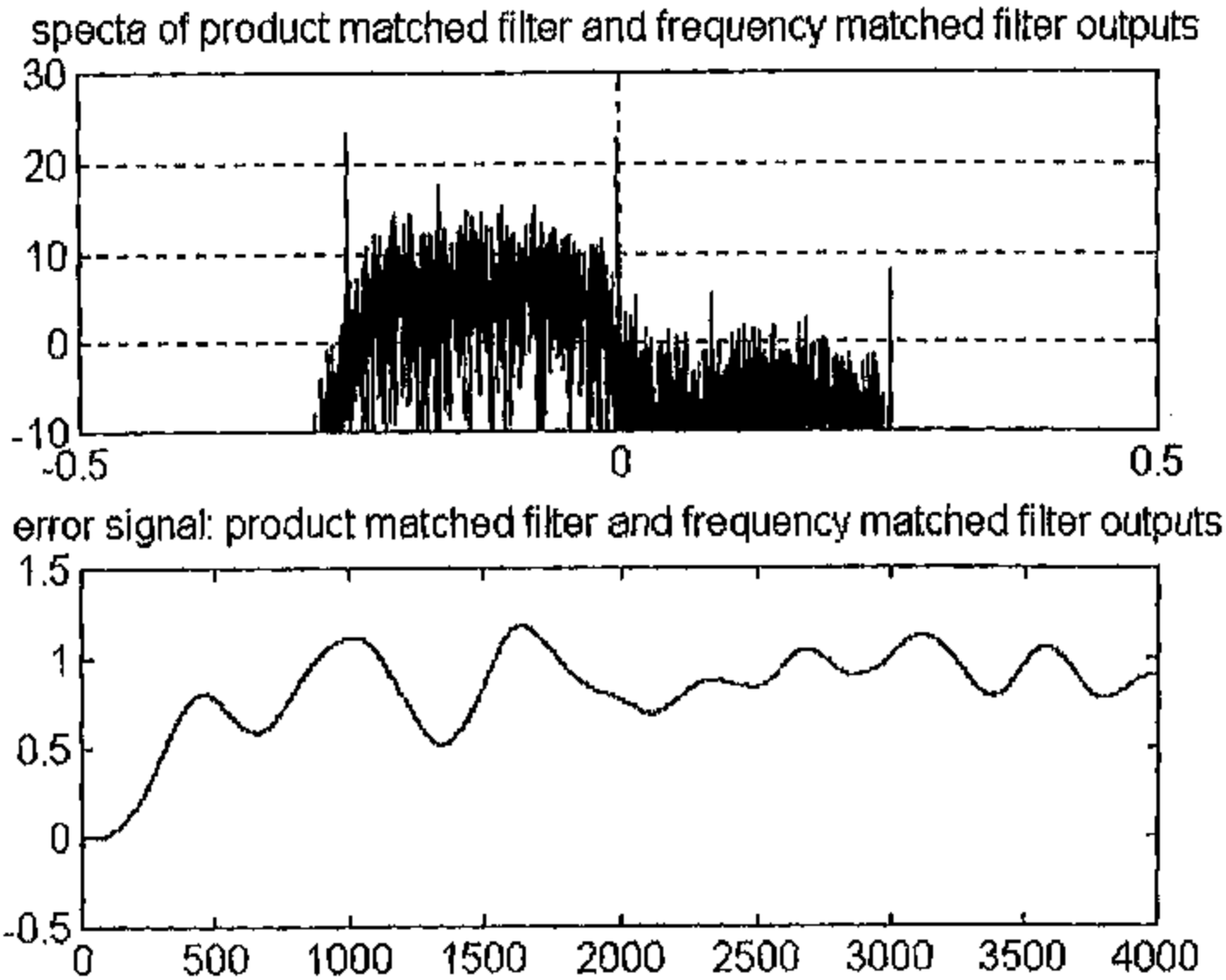
specta of product matched filter and frequency matched filter outputs
30
20
10
0
-10
-0.5
0
0.5
error signal: product matched filter and frequency matched filter outputs
1.5
1
0.5
0
-0.5
0
500
1000
1500
2000
2500
3000
3500
4000

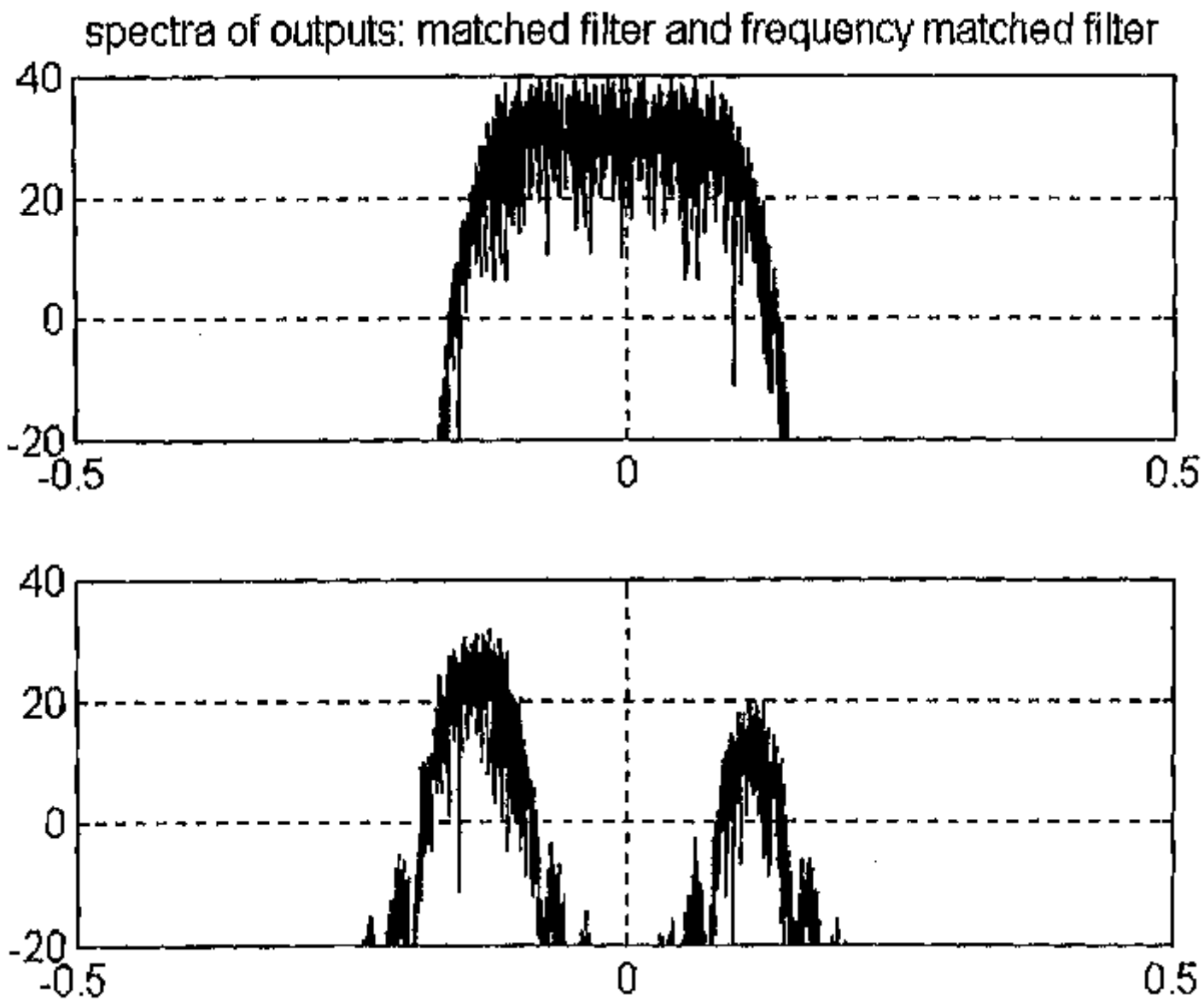
spectra of outputs: matched filter and frequency matched filter
40
20
0
-20
-0.5
0
0.5
40
20
0
-20
-0.5
0
0.5

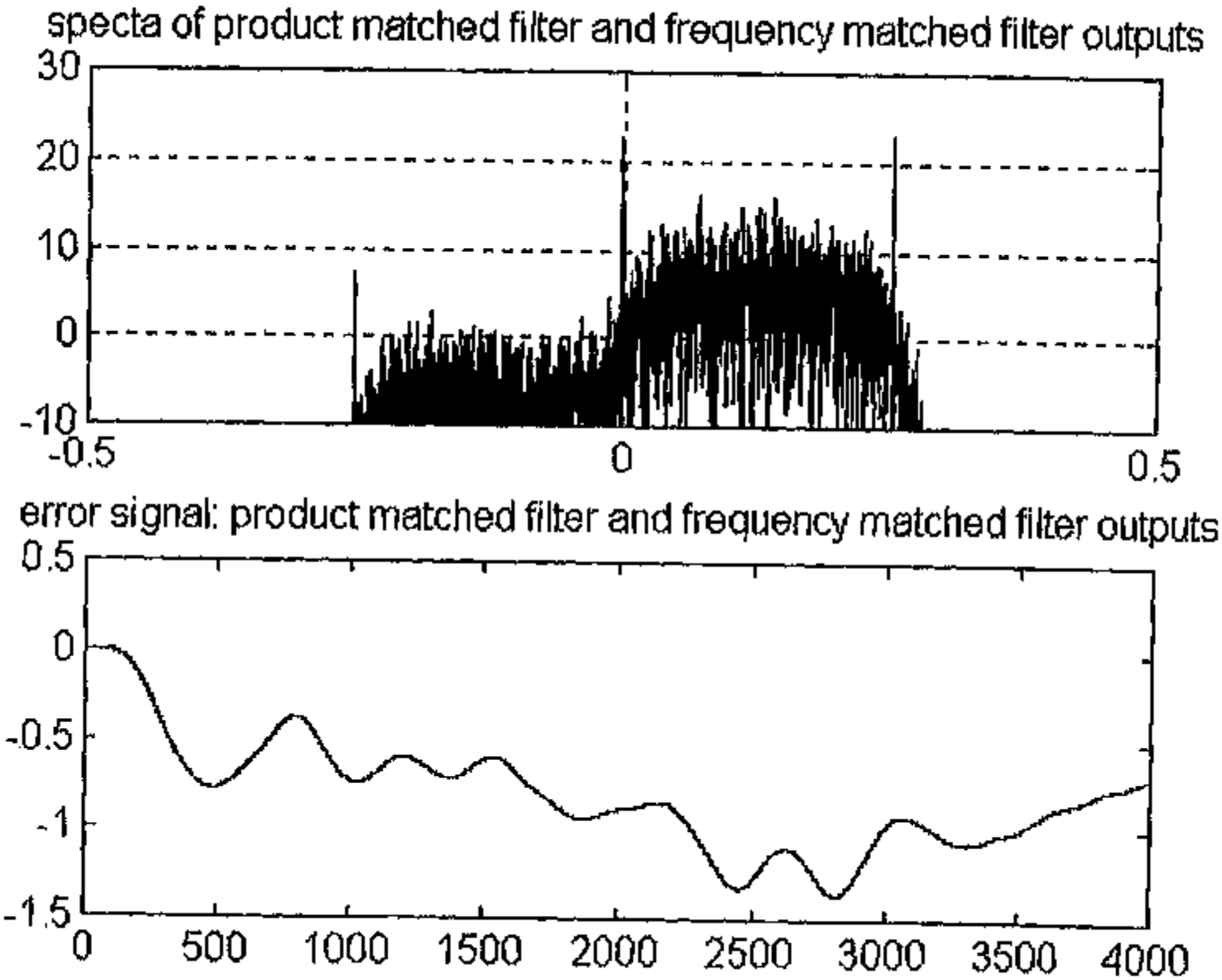
specta of product matched filter and frequency matched filter outputs
30
20
10
0
-10
-0.5
0
0.5
error signal: product matched filter and frequency matched filter outputs
0.5
0
-0.5
-1
-1.5
0
500
1000
1500
2000
2500
3000
3500
4000

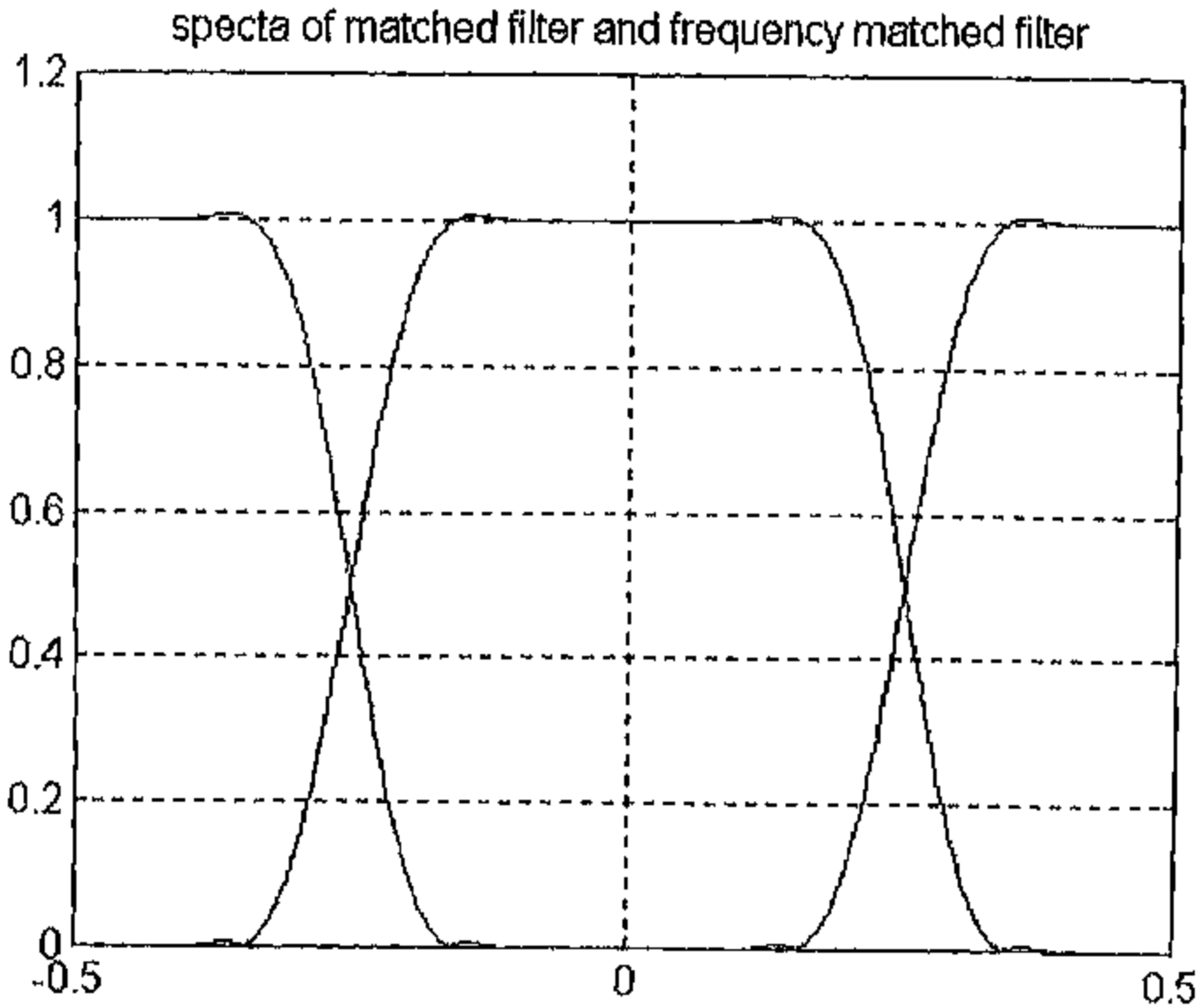
specta of matched filter and frequency matched filter
1.2
1
0.8
0.6
0.4
0.2
0
-0.5
0
0.5

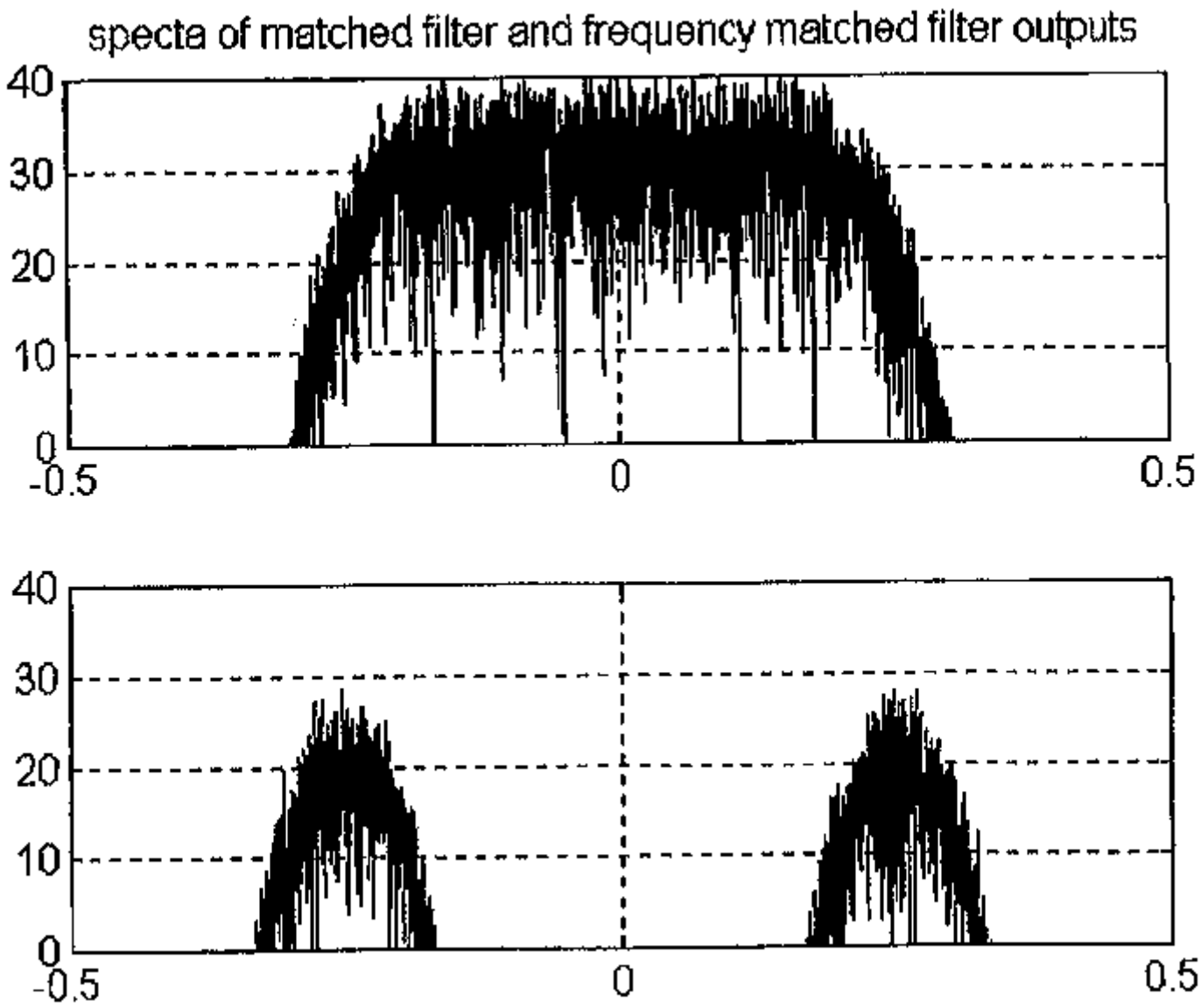
specta of matched filter and frequency matched filter outputs
40
30
20
10
0
-0.5
0
0.5
40
30
20
10
0
-0.5
0
0.5

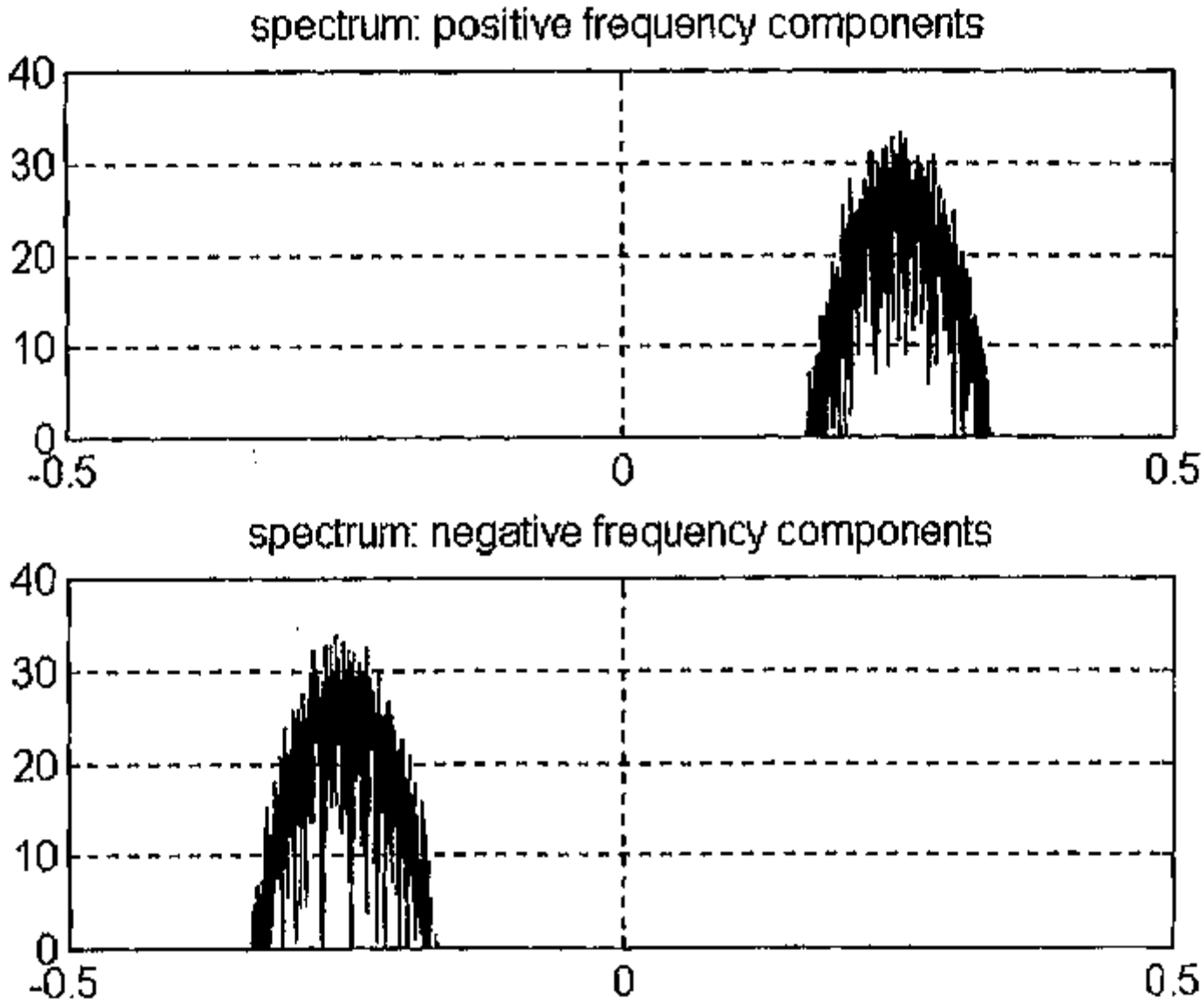
spectrum: positive frequency components
40
30
20
10
0
-0.5
0
0.5
spectrum: negative frequency components
40
30
20
10
0
-0.5
0
0.5

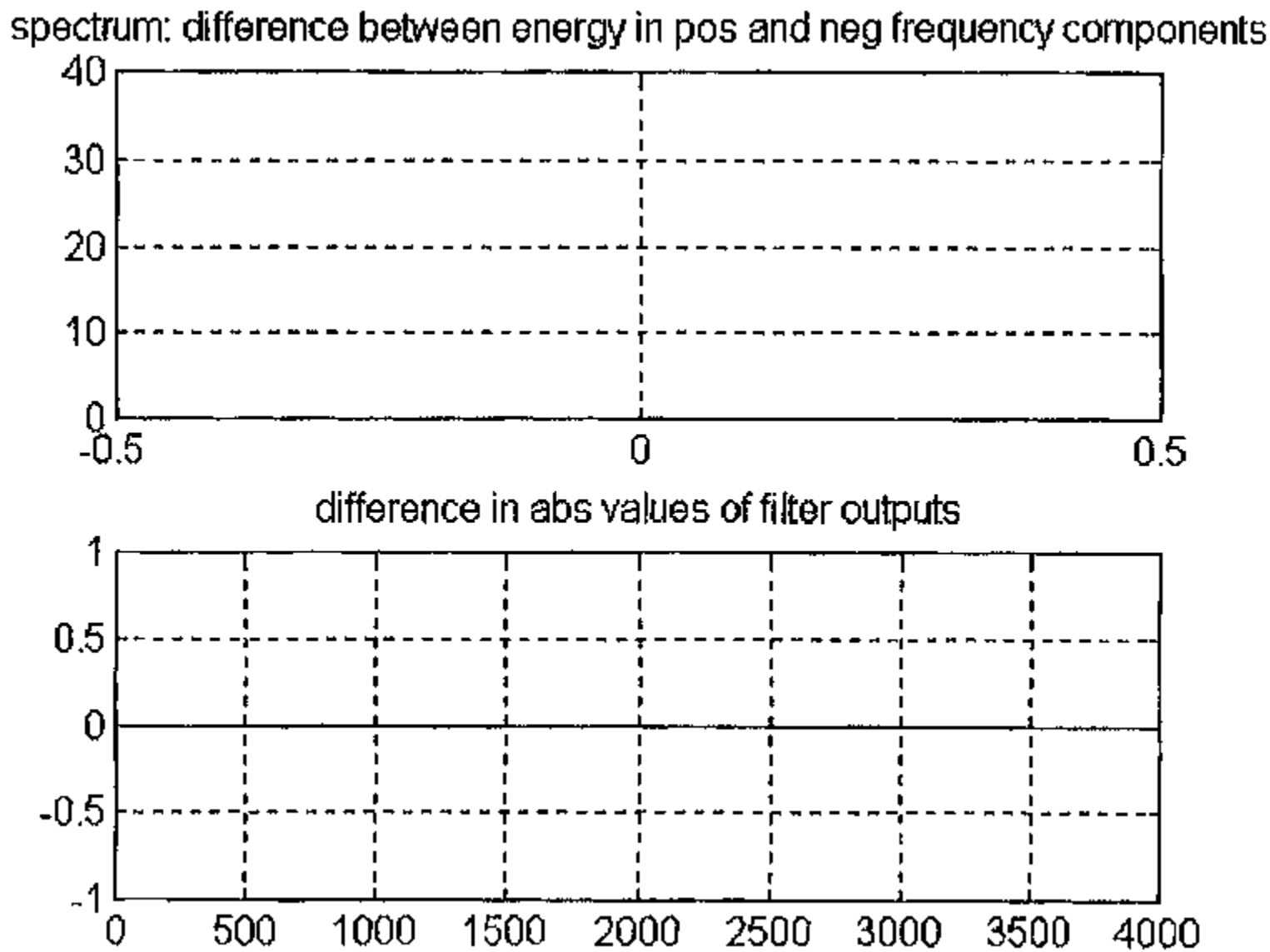
spectrum: difference between energy in pos and neg frequency components
40
30
20
10
0
-0.5
0
0.5
difference in abs values of filter outputs
1
0.5
0
-0.5
-1
0
500
1000
1500
2000
2500
3000
3500
4000

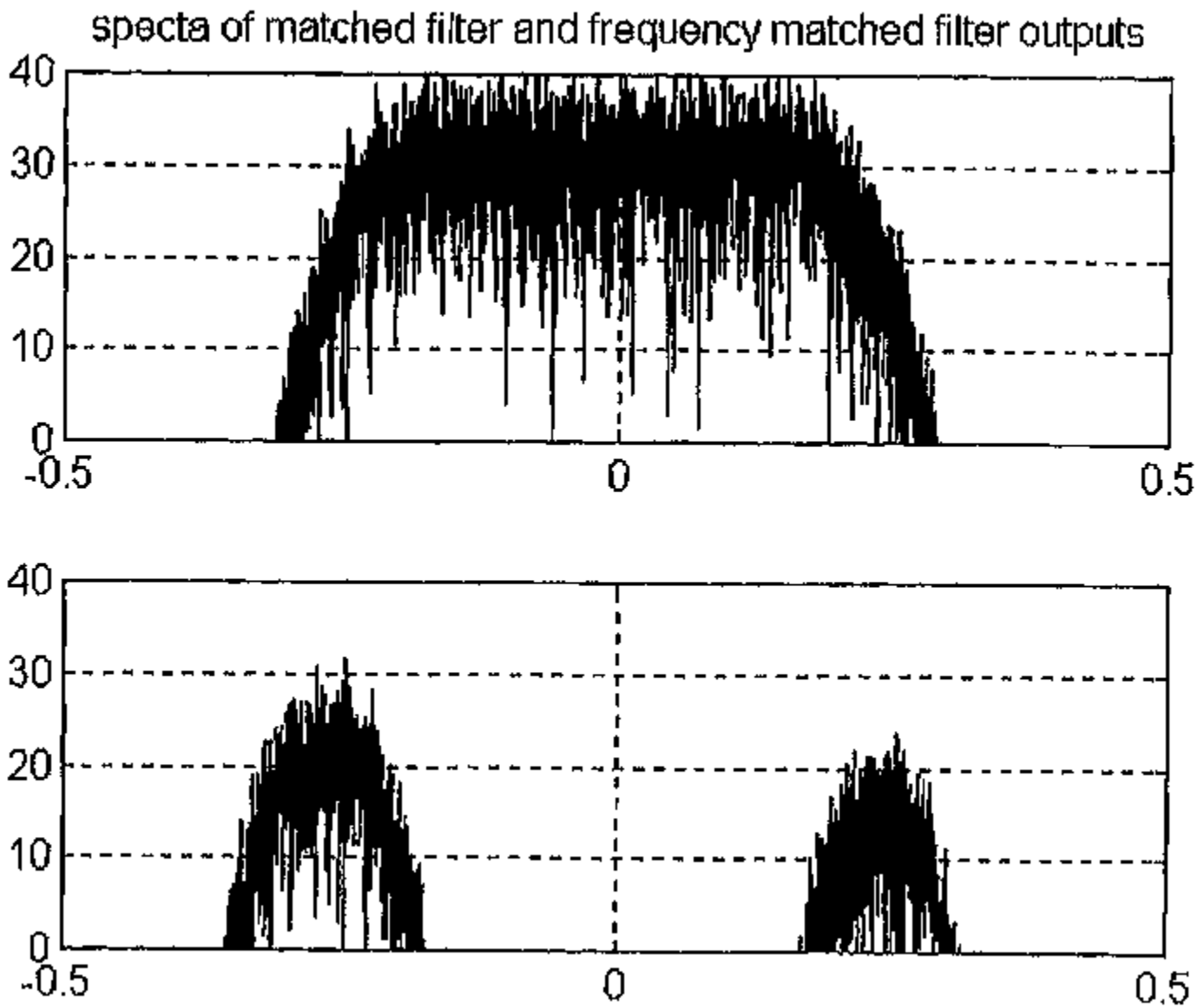
specta of matched filter and frequency matched filter outputs
40
30
20
10
0
-0.5
0
0.5
40
30
20
10
0
-0.5
0
0.5

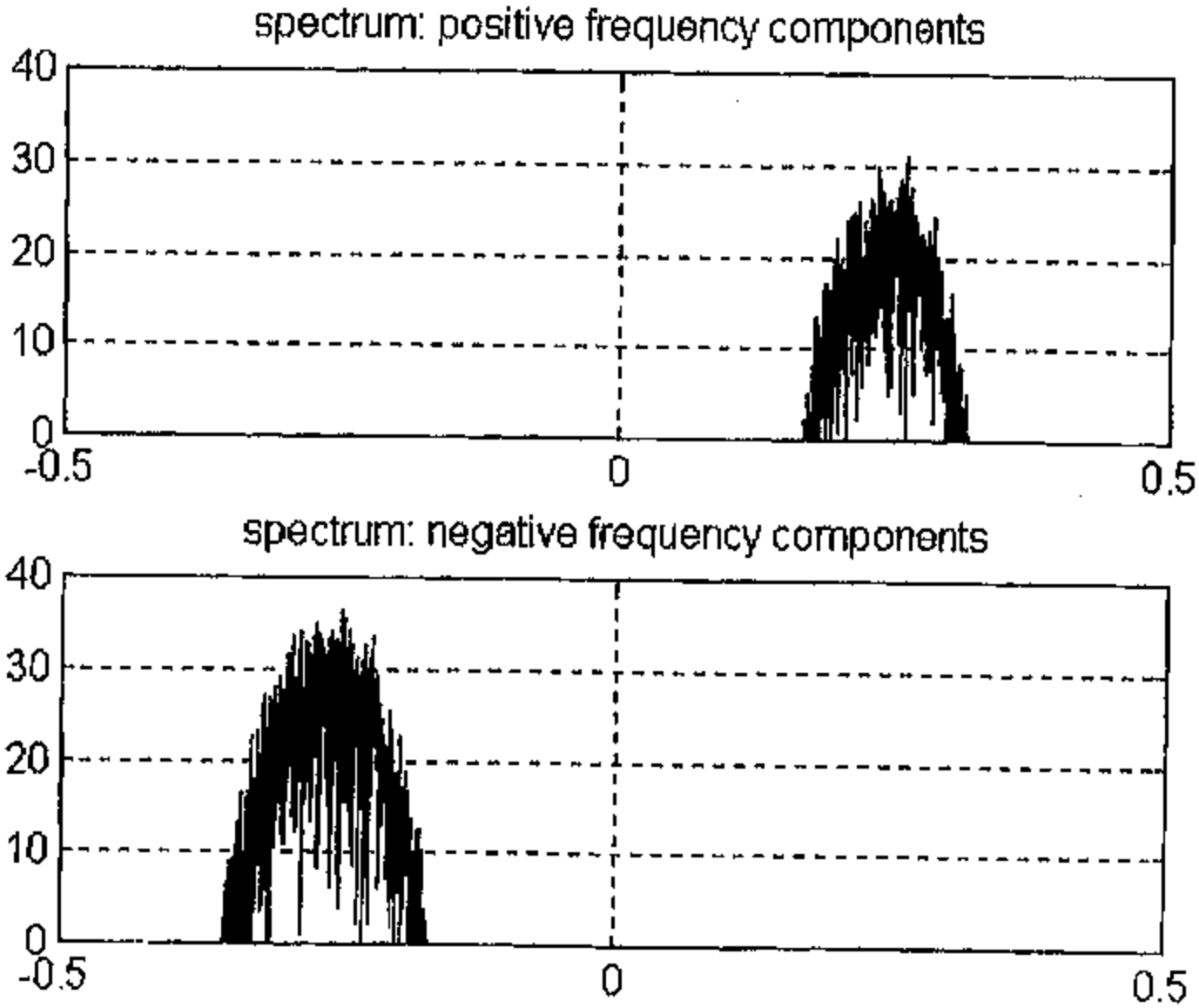
spectrum: positive frequency components
40
30
20
10
0
-0.5
0
0.5
spectrum: negative frequency components
40
30
20
10
0
-0.5
0
0.5

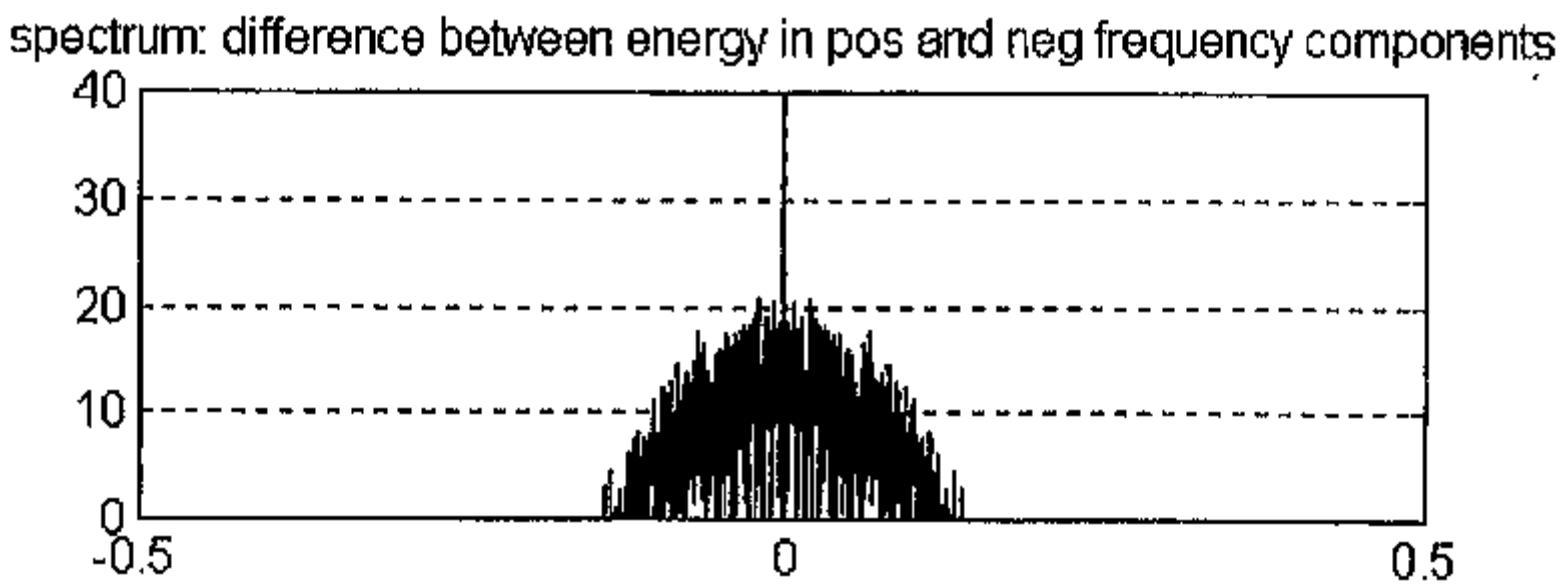
spectrum: difference between energy in pos and neg frequency components
40
30
20
10
0
-0.5
0
0.5

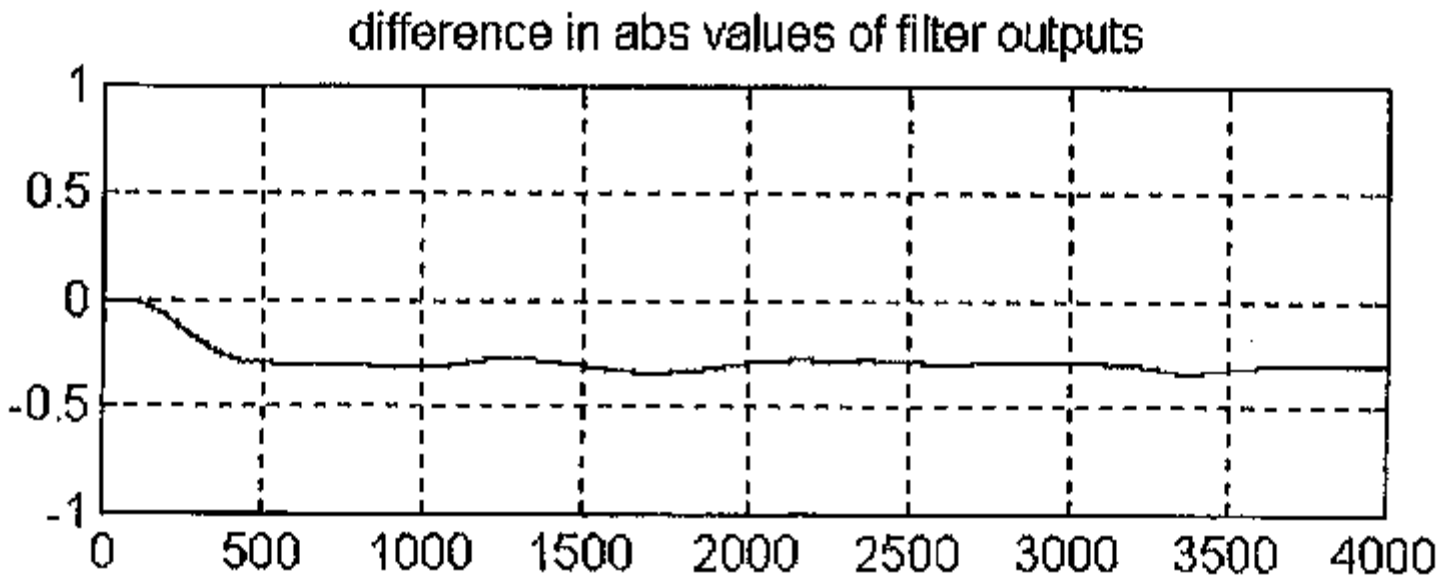
difference in abs values of filter outputs
1
0.5
0
-0.5
-1
0
500
1000
1500
2000
2500
3000
3500
4000

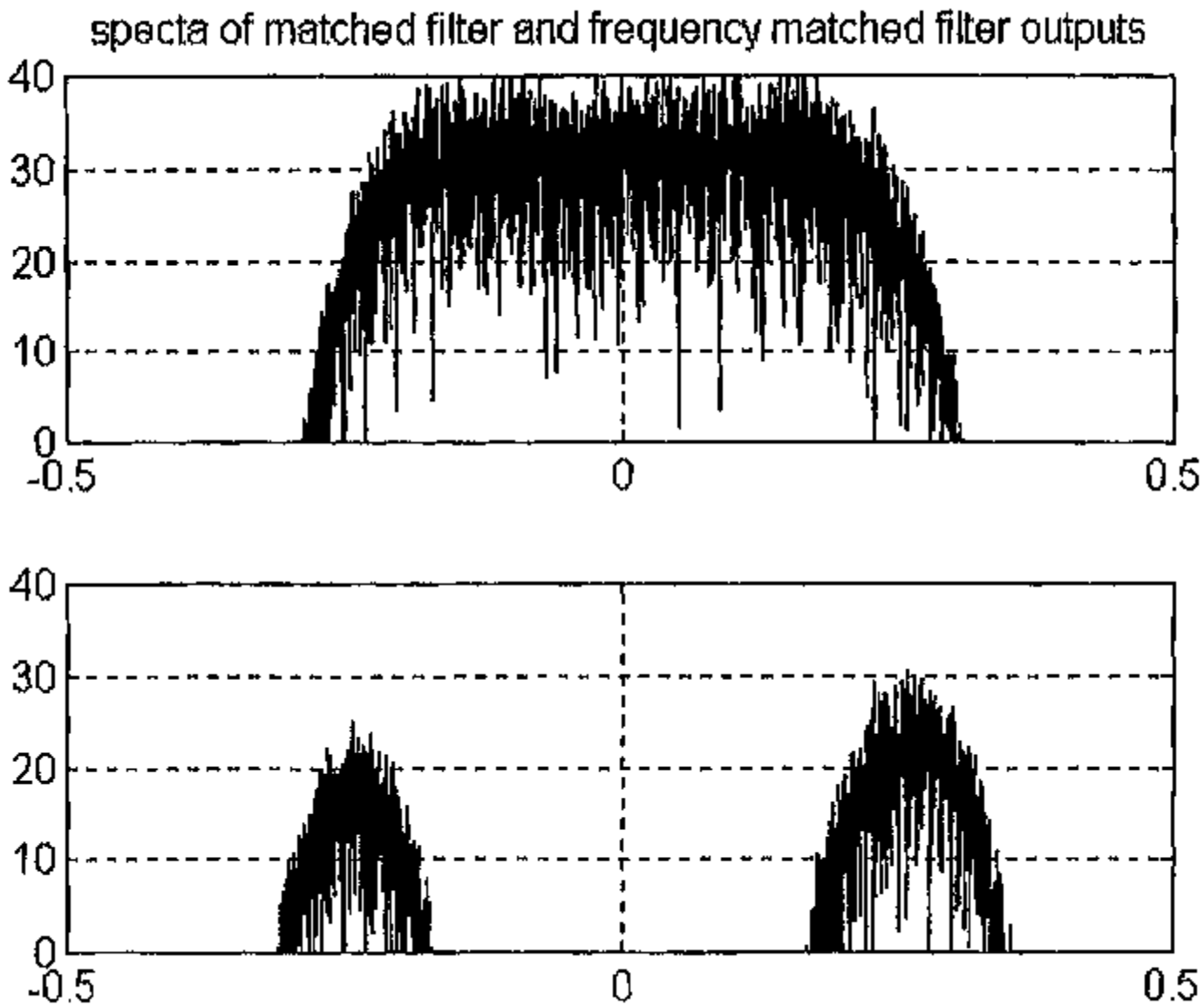
specta of matched filter and frequency matched filter outputs
40
30
20
10
0
-0.5
0
0.5
40
30
20
10
0
-0.5
0
0.5

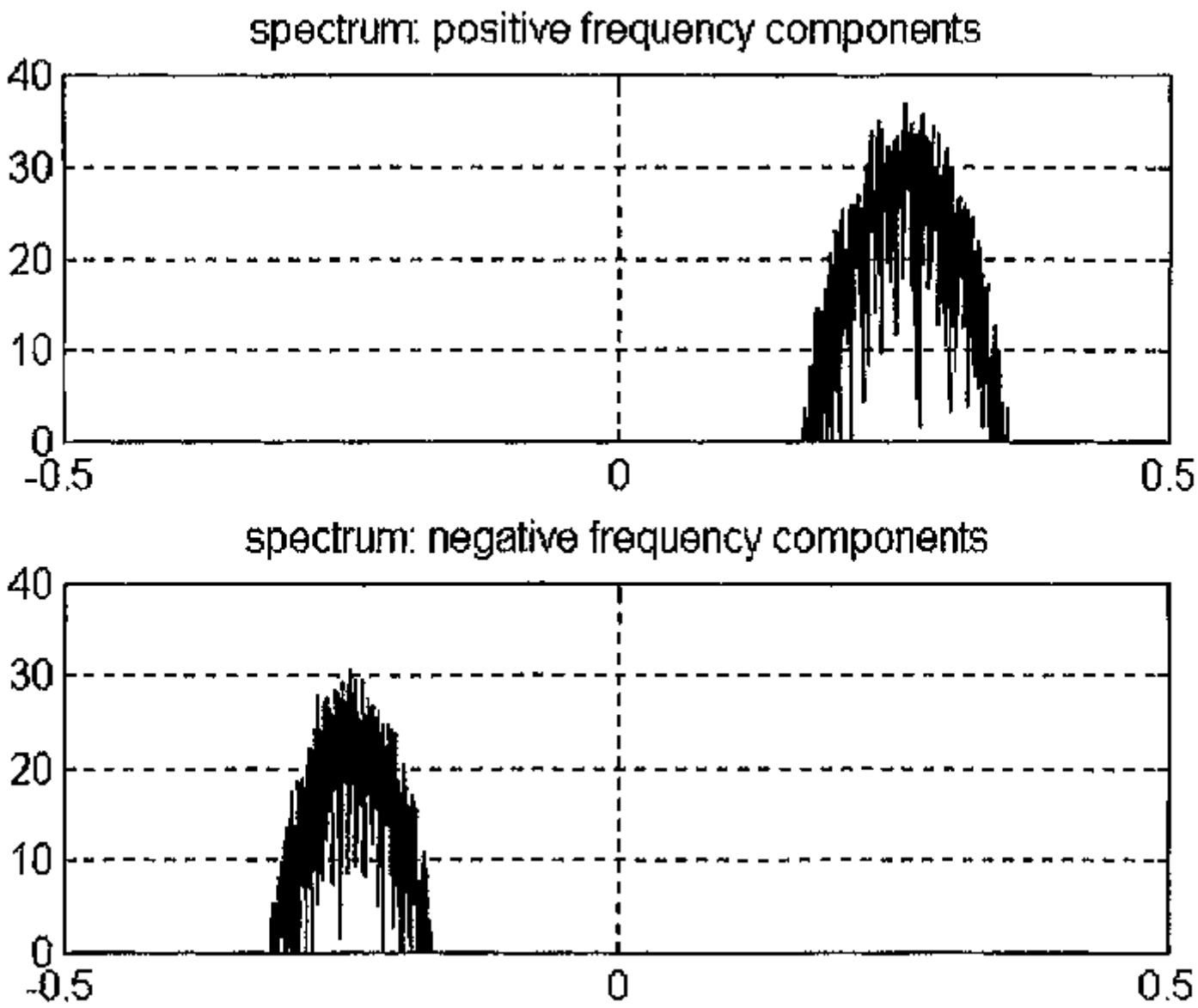
spectrum: positive frequency components
40
30
20
10
0
-0.5
0
0.5
spectrum: negative frequency components
40
30
20
10
0
-0.5
0
0.5

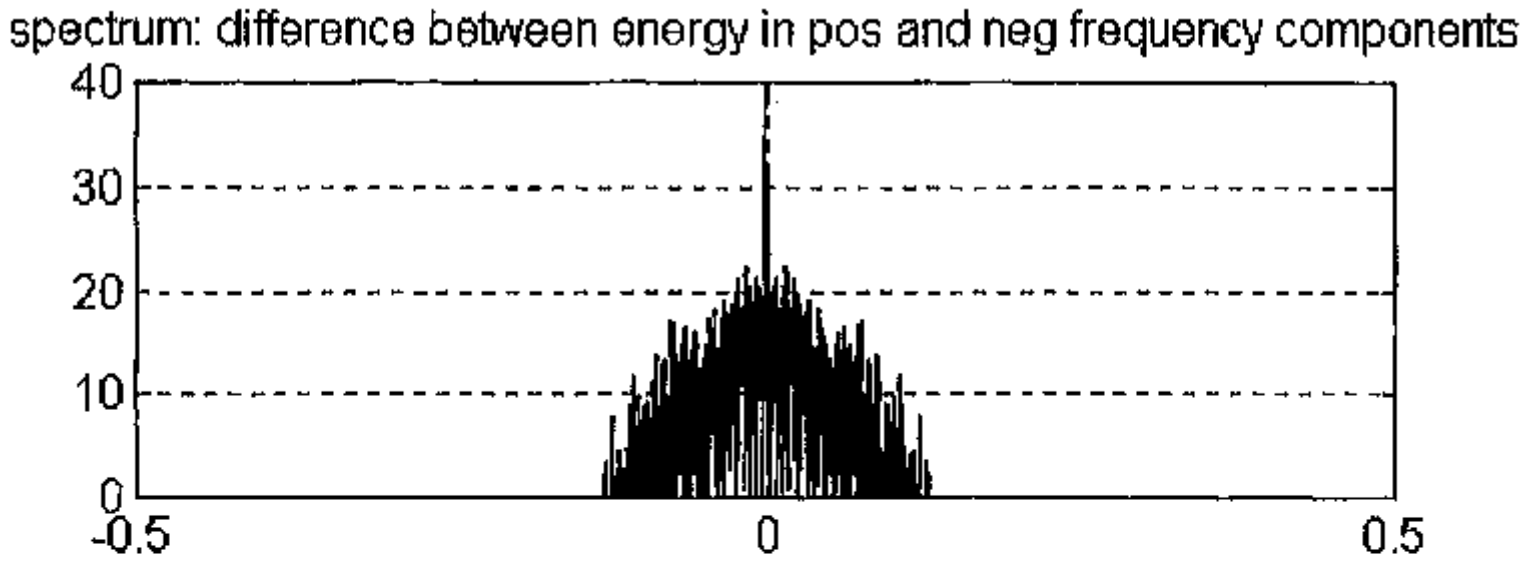
spectrum: difference between energy in pos and neg frequency components
40
30
20
10
0
-0.5
0
0.5

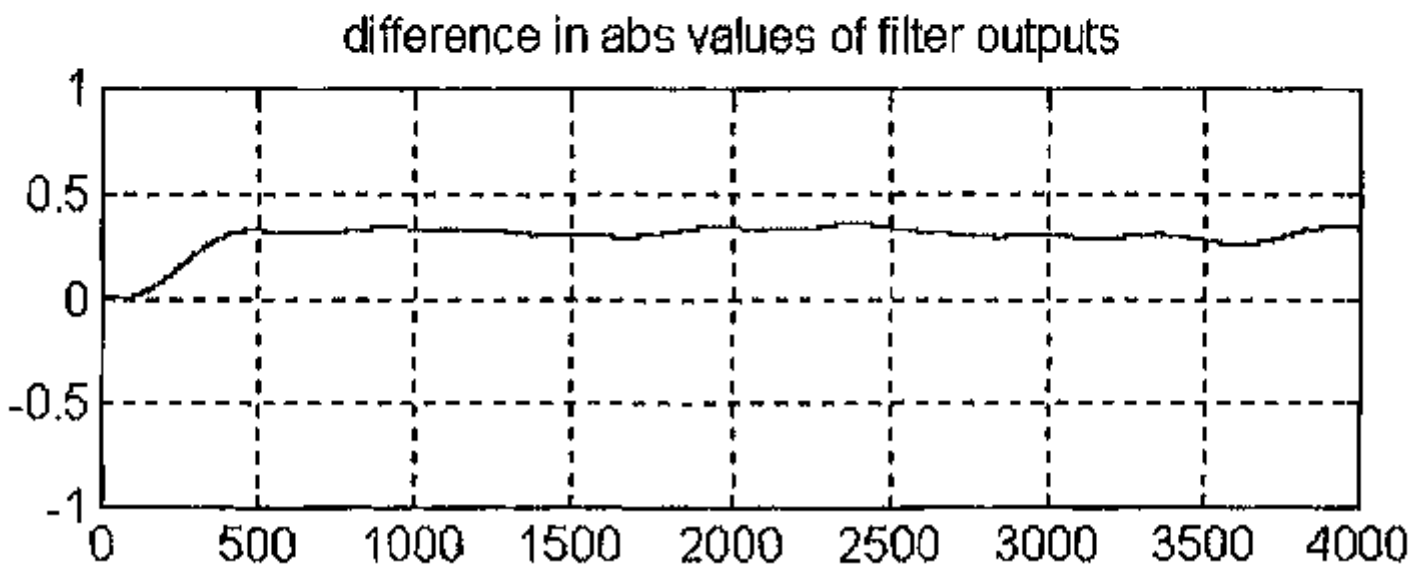
difference in abs values of filter outputs
1
0.5
0
-0.5
-1
0
500
1000
1500
2000
2500
3000
3500
4000